BS EN 60601-2-52:2010+A1:2015

Incorporating corrigenda September 2010 and April 2011

BSI Standards Publication

Medical electrical equipment

Part 2-52: Particular requirements for basic safety and essential performance of medical beds

bsi.

...making excellence a habit.™

Copyright British Standards Institution
Provided by IHS under license with BSI - Uncontrolled Copy
No reproduction or networking permitted without license from IHS

Licensee=Hill Rom Inc/0078415001, User=Laloge, Dennis
Not for Resale, 10/29/2015 08:09:16 MDT

National foreword

This British Standard is the UK implementation of EN 60601-2-52:2010+A1:2015, incorporating corrigendum April 2011. It is identical to IEC 60601-2-52:2009, incorporating amendment 1:2015 and corrigendum September 2010. It supersedes BS EN 60601-2-52:2010 which will be withdrawn on 22 April 2018.

The start and finish of text introduced or altered by corrigendum is indicated in the text by tags. Text altered by IEC corrigendum September 2010 is indicated in the text by ▌AC1⟩ ⟨AC1▐.

The start and finish of text introduced or altered by amendment is indicated in the text by tags. Tags indicating changes to IEC text carry the number of the IEC amendment. For example, text altered by IEC amendment 1 is indicated by ▌A1⟩ ⟨A1▐.

The UK participation in its preparation was entrusted by Technical Committee CH/62, Electrical Equipment in Medical Practice, to Subcommittee CH/62/4, Electromedical equipment.

A list of organizations represented on this committee can be obtained on request to its secretary.

This publication does not purport to include all the necessary provisions of a contract. Users are responsible for its correct application.

© The British Standards Institution 2015.
Published by BSI Standards Limited 2015

ISBN 978 0 580 82158 5

ICS 11.140

Compliance with a British Standard cannot confer immunity from legal obligations.

This British Standard was published under the authority of the Standards Policy and Strategy Committee on 31 May 2010.

Amendments/corrigenda issued since publication

Date	Text affected
31 September 2011	Implementation of IEC corrigendum September 2010 and CENELEC corrigendum April 2011: modification of EN foreword
30 June 2015	Implementation of IEC amendment 1:2015 with CENELEC endorsement A1:2015

Copyright British Standards Institution
Provided by IHS under license with BSI - Uncontrolled Copy
No reproduction or networking permitted without license from IHS

Licensee=Hill Rom Inc/0078415001, User=Laloge, Dennis
Not for Resale, 10/29/2015 08:09:16 MDT

EUROPEAN STANDARD

NORME EUROPÉENNE

EUROPÄISCHE NORM

EN 60601-2-52:2010+A1

May 2015

ICS 11.140

Incorporating corrigendum April 2011

English version

Medical electrical equipment - Part 2-52: Particular requirements for basic safety and essential performance of medical beds

(IEC 60601-2-52:2009)

Appareils électromédicaux - Partie 2-52: Exigences particulières pour la sécurité de base et les performances essentielles des lits médicaux (CEI 60601-2-52:2009)

Medizinische elektrische Geräte - Teil 2-52: Besondere Festlegungen für die Sicherheit einschließlich der wesentlichen Leistungsmerkmale von medizinischen Betten (IEC 60601-2-52:2009)

This European Standard was approved by CENELEC on 2010-04-01. CENELEC members are bound to comply with the CEN/CENELEC Internal Regulations which stipulate the conditions for giving this European Standard the status of a national standard without any alteration.

Up-to-date lists and bibliographical references concerning such national standards may be obtained on application to the Central Secretariat or to any CENELEC member.

This European Standard exists in three official versions (English, French, German). A version in any other language made by translation under the responsibility of a CENELEC member into its own language and notified to the Central Secretariat has the same status as the official versions.

CENELEC members are the national electrotechnical committees of Austria, Belgium, Bulgaria, Croatia, Cyprus, the Czech Republic, Denmark, Estonia, Finland, France, Germany, Greece, Hungary, Iceland, Ireland, Italy, Latvia, Lithuania, Luxembourg, Malta, the Netherlands, Norway, Poland, Portugal, Romania, Slovakia, Slovenia, Spain, Sweden, Switzerland and the United Kingdom.

CEN-CENELEC

European Committee for Electrotechnical Standardization
Comité Européen de Normalisation Electrotechnique
Europäisches Komitee für Elektrotechnische Normung

Central Secretariat: Avenue Marnix 17, B - 1000 Brussels

© 2010 CEN-CENELEC - All rights of exploitation in any form and by any means reserved worldwide for CEN-CENELEC members.

Ref. No. EN 60601-2-52:2010 E

Copyright British Standards Institution
Provided by IHS under license with BSI - Uncontrolled Copy
No reproduction or networking permitted without license from IHS

Licensee=Hill Rom Inc/0078415001, User=Laloge, Dennis
Not for Resale, 10/29/2015 08:09:16 MDT

Foreword

This European Standard is the result of a CENELEC lead joint collaboration between CLC/TC 62 and CEN/TC 293.

The text of document 62D/795/FDIS, future edition 1 of IEC 60601-2-52, prepared by SC 62D, Electromedical equipment, of IEC TC 62, Electrical equipment in medical practice, was submitted to the IEC-CENELEC parallel vote and was approved by CENELEC as EN 60601-2-52 on 2010-04-01.

This European Standard supersedes EN 60601-2-38:1996 + A1:2000 and EN 1970:2000.

Attention is drawn to the possibility that some of the elements of this document may be the subject of patent rights. CEN and CENELEC shall not be held responsible for identifying any or all such patent rights.

The following dates were fixed:

– latest date by which the EN has to be implemented at national level by publication of an identical national standard or by endorsement	(dop)	2011-01-01
– latest date by which the national standards conflicting with the EN have to be withdrawn	(dow)	2013-04-01

This European Standard has been prepared under a mandate given to CENELEC by the European Commission and the European Free Trade Association and covers essential requirements of EC Directive 93/42/EEC. See Annex ZZ.

Annexes ZA and ZZ have been added by CENELEC.

Endorsement notice

The text of the International Standard IEC 60601-2-52:2009 was approved by CENELEC as a European Standard without any modification.

In the official version, for Bibliography, the following note has to be added for the standards indicated:

IEC 60601-2-38 NOTE Harmonized as EN 60601-2-38

Copyright British Standards Institution
Provided by IHS under license with BSI - Uncontrolled Copy
No reproduction or networking permitted without license from IHS
Licensee=Hill Rom Inc/0078415001, User=Laloge, Dennis
Not for Resale, 10/29/2015 08:09:16 MDT

Foreword to amendment A1

The text of document 62D/1186/FDIS, future IEC 60601-2-52:2009/A1, prepared by SC 62D "Electromedical equipment" of IEC/TC 62 "Electrical equipment in medical practice" was submitted to the IEC-CENELEC parallel vote and approved by CENELEC as EN 60601-2-52:2010/A1:2015.

The following dates are fixed:

• latest date by which the document has to be implemented at national level by publication of an identical national standard or by endorsement	(dop)	2016-01-22
• latest date by which the national standards conflicting with the document have to be withdrawn	(dow)	2018-04-22

Attention is drawn to the possibility that some of the elements of this document may be the subject of patent rights. CENELEC [and/or CEN] shall not be held responsible for identifying any or all such patent rights.

This document has been prepared under a mandate given to CENELEC by the European Commission and the European Free Trade Association, and supports essential requirements of EU Directive.

For the relationship with EU Directive see informative Annex ZZ, included in EN 60601-2-52:2010.

Endorsement notice

The text of the International Standard IEC 60601-2-52:2009/A1:2015 was approved by CENELEC as a European Standard without any modification.

Copyright British Standards Institution
Provided by IHS under license with BSI - Uncontrolled Copy
No reproduction or networking permitted without license from IHS
Licensee=Hill Rom Inc/0078415001, User=Laloge, Dennis
Not for Resale, 10/29/2015 08:09:16 MDT

Annex ZA
(normative)

Normative references to international publications with their corresponding European publications

The following referenced documents are indispensable for the application of this document. For dated references, only the edition cited applies. For undated references, the latest edition of the referenced document (including any amendments) applies.

NOTE When an international publication has been modified by common modifications, indicated by (mod), the relevant EN/HD applies.

Addition *to Annex ZA of EN 60601-2:*

Publication	Year	Title	EN/HD	Year
IEC 60068-2-31	2008	Environmental testing - Part 2-31: Tests - Test Ec: Rough handling shocks, primarily for equipment-type specimens	EN 60068-2-31	2008

Copyright British Standards Institution
Provided by IHS under license with BSI - Uncontrolled Copy
No reproduction or networking permitted without license from IHS

Licensee=Hill Rom Inc/0078415001, User=Laloge, Dennis
Not for Resale, 10/29/2015 08:09:16 MDT

Annex ZZ
(informative)

Coverage of Essential Requirements of EC Directives

This European Standard has been prepared under a mandate given to CENELEC by the European Commission and the European Free Trade Association and within its scope the standard covers all relevant essential requirements as given in Annex I of the EC Directive 93/42/EEC except the following:

– Essential Requirement 7.1

Compliance with this standard provides one means of conformity with the specified essential requirements of the Directive concerned.

WARNING: Other requirements and other EC Directives may be applicable to the products falling within the scope of this standard.

Copyright British Standards Institution
Provided by IHS under license with BSI - Uncontrolled Copy
No reproduction or networking permitted without license from IHS
Licensee=Hill Rom Inc/0078415001, User=Laloge, Dennis
Not for Resale, 10/29/2015 08:09:16 MDT

CONTENTS

INTRODUCTION 9
201.1 Scope, object and related standards 10
201.2 Normative references 12
201.3 Terms and definitions 12
201.4 General requirements 16
201.5 General requirements for testing of ME EQUIPMENT 16
201.6 Classification of ME EQUIPMENT and ME SYSTEMS 18
201.7 ME EQUIPMENT identification, marking and documents 18
201.8 Protection against electrical HAZARDS from ME EQUIPMENT 23
201.9 Protection against MECHANICAL HAZARDS of ME EQUIPMENT and ME SYSTEMS 24
201.10 Protection against unwanted and excessive radiation HAZARDS 47
201.11 Protection against excessive temperatures and other HAZARDS 47
201.12 Accuracy of controls and instruments and protection against hazardous outputs 49
201.13 HAZARDOUS SITUATIONS and fault conditions 50
201.14 PROGRAMMABLE ELECTRICAL MEDICAL SYSTEMS (PEMS) 50
201.15 Construction of ME EQUIPMENT 51
201.16 ME SYSTEMS 54
201.17 Electromagnetic compatibility of ME EQUIPMENT and ME SYSTEMS 54
Annexes 54
Annex AA (informative) Particular guidance and rationale 55
Annex BB (normative) Design requirements and recommendations for MEDICAL BEDS 70
Annex CC (informative) Particular guidance for assessing risk of entrapment in v-shaped openings 78
Bibliography 84
Index of defined terms used in this particular standard 85

Figure 201.101 – APPLIED PART 12
Figure 201.102 – MEDICAL BED, general arrangement (example, schematic presentation only) 14
Figure 201.103a – Cool tool [A1] schematic [A1] 16
Figure 201.103b – Cylinder tool [A1] schematic [A1] 17
Figure 201.103 – Entrapment test tools 17
Figure 201.104 – Loading pad 17
Figure 201.105 – Graphic symbol for maximum PATIENT weight and SAFE WORKING LOAD 18
[A1] Figure 201.120 – Physical description of an ADULT ..... 19 [A1]
Figure 201.106 – MEDICAL BED function controls and/or actuators: guidelines for creating graphic symbols 21
Figure 201.107 – Example of MEDICAL BED with segmented or split SIDE RAIL 25
Figure 201.108 – Example of MEDICAL BED with single piece SIDE RAIL 26
Figure 201.109 – Allowable spacing for fingers in areas of normal reach around the perimeter of the MATTRESS SUPPORT PLATFORM 31

Copyright British Standards Institution
Provided by IHS under license with BSI - Uncontrolled Copy
No reproduction or networking permitted without license from IHS
Licensee=Hill Rom Inc/0078415001, User=Laloge, Dennis
Not for Resale, 10/29/2015 08:09:16 MDT

Figure 201.110 – Example using barriers for clearance measurement around the perimeter of the MATTRESS SUPPORT PLATFORM to mitigate PATIENT-finger entrapment 32
Figure 201.111a – Foot and toe clearance area between moving parts and the floor 32
Figure 201.111b – Toe clearance area between moving parts and the floor 33
Figure 201.111 – Clearance areas 33
Figure 201.112 – Lateral stability test along the side of the MEDICAL BED 35
Figure 201.113 – Longitudinal stability test with removable FOOT BOARD 35
Figure 201.114 – Longitudinal stability test with fixed HEAD/FOOT BOARDS 36
Figure 201.115 – Distribution of SAFE WORKING LOAD for tests 40
Figure 201.116 – Position of loading pad (see Figure 201.104) 43
Figure 201.117 – Application of forces for test of SIDE RAIL 45
Figure 201.118 – Height of SIDE RAIL 46
Figure 201.119a – Angle γ between the back section and the leg section of the MATTRESS SUPPORT PLATFORM 52
Figure 201.119b – Angle γ between the back section and the upper leg section of the MATTRESS SUPPORT PLATFORM 52
Figure 201.119c – Angle γ between the angled back section and upper leg section of the MATTRESS SUPPORT PLATFORM 52
Figure 201.119d – Angle γ between the angled back section and the leg/upper leg section of the MATTRESS SUPPORT PLATFORM 53
Figure 201.119 – Configurations of the MATTRESS SUPPORT PLATFORM 53
Figure AA.1 – Marking to select recommended mattresses specified by the MANUFACTURER 57
Figure AA.2 – Marking for detachable SIDE RAILS specified by the MANUFACTURER 58
Figure AA.3 – Resultant forces without mattress 61
Figure AA.4 – Resultant forces with mattress 61
Figure AA.5 – Example of 60 mm gap measurement of B 61
Figure AA.6 – Angle measurement example of B 61
Figure AA.7 – Placement of measurement TOOL for measurement of D 62
Figure AA.8 – Example of area D measurement that passes 62
Figure AA.9 – Example of area D measurement that fails 62
Figure AA.10 – Example of area D measurement that fails (on limit) 63
Figure AA.11 – Example of potential PATIENT entrapment in area A within the SIDE RAIL 63
Figure AA.12 – Example of potential PATIENT entrapment in area A below the SIDE RAIL 63
Figure AA.13 – Example of potential PATIENT entrapment in area B 63
Figure AA.14 – Example of potential PATIENT entrapment in area C between split SIDE RAIL 63
Figure AA.15 – Example of potential PATIENT entrapment in area C between SIDE RAIL and HEAD BOARD 64
Figure AA.16 – Example of potential PATIENT entrapment in area D 64
Figure AA.17 – Example of potential PATIENT entrapment in area A below a single piece SIDE RAIL 64
Figure BB.1 – Other areas of possible impact testing 71
Figure BB.2 – Impactor 72
Figure BB.3 – Schematic presentation of under MEDICAL BED clearance 75

Copyright British Standards Institution
Provided by IHS under license with BSI - Uncontrolled Copy
No reproduction or networking permitted without license from IHS
Licensee=Hill Rom Inc/0078415001, User=Laloge, Dennis
Not for Resale, 10/29/2015 08:09:16 MDT

Figure BB.4 – Recommendations and requirements regarding angles for different sections of the MATTRESS SUPPORT PLATFORM 77
Figure CC.1 – Wedge tool 79
Figure CC.2 – V-shaped opening in relation to B 80
Figure CC.3 – Pass/fail in relation to area B 80
Figure CC.4 – Positioning of wedge tool 81
Figure CC.5 – Pass/fail in relation to area C between HEAD BOARD and FOOT BOARD 82
Figure CC.6 – Pass/fail in relation to area C between split SIDE RAILS 83

Table 201.101 – Protection against PATIENT entrapment 27
Table 201.102 – Protection against inadvertent PATIENT falls 47
Table 24 – Allowable maximum temperatures for skin contact with MEDICAL BED APPLIED PARTS 48
Table BB.1 – Normative and informative requirements for different APPLICATION ENVIRONMENTS 1 to 5 70

Copyright British Standards Institution
Provided by IHS under license with BSI - Uncontrolled Copy
No reproduction or networking permitted without license from IHS
Licensee=Hill Rom Inc/0078415001, User=Laloge, Dennis
Not for Resale, 10/29/2015 08:09:16 MDT

INTRODUCTION

In 1996, the IEC published the first edition of the particular standard for electrically operated hospital beds, IEC 60601-2-38. The publication was in response to demand in the field for a universal standard addressing HAZARDS specific to the safety of the hospital bed. Used in conjunction with a MANUFACTURER'S RISK ASSESSMENT, the standard was felt to be the current thinking on establishing a basic safety benchmark for industry.

An amendment of IEC 60601-2-38 issued in 1999 recognized the need to mitigate against a RISK of PATIENT entrapment in the SIDE RAILS, again combined with the use of the MANUFACTURER'S RISK ASSESSMENT. Although this improved the particular standard, it still was centered upon electrically operated hospital beds, and failed to take into account manually operated hospital beds and products in other medical environments.

In 2000, the EN 1970 standard (*Adjustable beds for DISABLED PERSONS – Requirements and test methods*) was published, which addressed beds used by DISABLED PERSONS to alleviate or compensate for a disability or handicap. This standard offered a broadened scope in conjunction with IEC 60601-2-38, but after the edition of Amendment 1 to IEC 60601-2-38, the opportunity presented itself to combine the two standards to a common, international standard.

As work began on the integration, the IEC adjusted its stance on BASIC SAFETY and ESSENTIAL PERFORMANCE, integrating them into the third edition of IEC 60601-1. It therefore became necessary to align the new standard with the third edition. The particular standard was given a new number, IEC 60601-2-52, and work began on alignment to third edition.

This particular standard, therefore, is the realization of much work in alignment, and scope adjustment between IEC 60601-2-38, EN 1970, and the third edition of IEC 60601-1. It represents the current thinking in BASIC SAFETY and ESSENTIAL PERFORMANCE of the MEDICAL BED as used to alleviate illness of PATIENTS and disability of DISABLED PERSONS. This is the effort of a joint working group of the IEC and the ISO.

Copyright British Standards Institution
Provided by IHS under license with BSI - Uncontrolled Copy
No reproduction or networking permitted without license from IHS
Licensee=Hill Rom Inc/0078415001, User=Laloge, Dennis
Not for Resale, 10/29/2015 08:09:16 MDT

MEDICAL ELECTRICAL EQUIPMENT –

Part 2-52: Particular requirements for the basic safety and essential performance of medical beds

201.1 Scope, object and related standards

Clause 1 of the general standard[1)] applies, except as follows:

201.1.1 * Scope

Replacement:

A1 This International Standard applies to the BASIC SAFETY and ESSENTIAL PERFORMANCE of MEDICAL BEDS as defined in 201.3.212, intended for ADULTS as defined in 201.3.219. A1

If a clause or subclause is specifically intended to be applicable to a MEDICAL BED only, or to ME SYSTEMS only, the title and content of that clause or subclause will say so. If that is not the case, the clause or subclause applies both to MEDICAL BED and to ME SYSTEMS, as relevant.

HAZARDS inherent in the intended physiological function of MEDICAL BED or ME SYSTEMS within the scope of this standard are not covered by specific requirements in this standard except in 7.2.13 and 8.4.1 of the general standard.

NOTE See also 4.2 of the General Standard.

201.1.2 Object

Replacement:

A1 The object of this particular standard is to establish particular BASIC SAFETY and ESSENTIAL PERFORMANCE requirements for MEDICAL BEDS as defined in 201.3.212 intended for ADULTS as defined in 201.3.219. A1

201.1.3 Collateral standards

Addition:

This particular standard refers to those applicable collateral standards that are listed in Clause 2 of the general standard and Clause 2 of this particular standard.

IEC 60601-1-3, IEC 60601-1-8 and IEC 60601-1-10[2)] do not apply. All other published collateral standards in the IEC 60601-1 series apply as published.

---

1) The general standard is IEC 60601-1:2005, *Medical electrical equipment – Part 1: General requirements for basic safety and essential performance.*

2) IEC 60601-1-10:2007, *Medical electrical equipment – Part 1-10: General requirements for basic safety and essential performance – Collateral Standard: Requirements for the development of physiologic closed-loop controllers*

Copyright British Standards Institution
Provided by IHS under license with BSI - Uncontrolled Copy
No reproduction or networking permitted without license from IHS
Licensee=Hill Rom Inc/0078415001, User=Laloge, Dennis
Not for Resale, 10/29/2015 08:09:16 MDT

201.1.4 Particular standards

Replacement:

In the IEC 60601 series, particular standards may modify, replace or delete requirements contained in the general standard and collateral standards as appropriate for the particular ME EQUIPMENT under consideration, and may add other BASIC SAFETY and ESSENTIAL PERFORMANCE requirements.

A requirement of a particular standard takes priority over the general standard.

For brevity, IEC 60601-1 is referred to in this particular standard as the general standard. Collateral standards are referred to by their document number.

The numbering of clauses and subclauses of this particular standard corresponds to that of the general standard with the prefix “201” (e.g. 201.1 in this standard addresses the content of Clause 1 of the general standard) or applicable collateral standard with the prefix “20x” where x is the final digit(s) of the collateral standard document number (e.g. 202.4 in this particular standard addresses the content of Clause 4 of the IEC 60601-1-2 collateral standard, 203.4 in this particular standard addresses the content of Clause 4 of the IEC 60601-1-3 collateral standard, etc.). The changes to the text of the general standard are specified by the use of the following words:

"Replacement" means that the clause or subclause of the general standard or applicable collateral standard is replaced completely by the text of this particular standard.

"Addition" means that the text of this particular standard is additional to the requirements of the general standard or applicable collateral standard.

"Amendment" means that the clause or subclause of the general standard or applicable collateral standard is amended as indicated by the text of this particular standard.

Subclauses, figures or tables which are additional to those of the general standard are numbered starting from 201.101. However, due to the fact that definitions in the general standard are numbered 3.1 through 3.139, additional definitions in this standard are numbered beginning from 201.3.201. Additional annexes are lettered AA, BB, etc., and additional items aa), bb), etc.

Subclauses, figures or tables which are additional to those of a collateral standard are numbered starting from 20x, where “x” is the number of the collateral standard, e.g. 202 for IEC 60601-1-2, 203 for IEC 60601-1-3, etc.

The term "this standard" is used to make reference to the general standard, any applicable collateral standards and this particular standard taken together.

Where there is no corresponding clause or subclause in this particular standard, the clause or subclause of the general standard or applicable collateral standard, although possibly not relevant, applies without modification; where it is intended that any part of the general standard or applicable collateral standard, although possibly relevant, is not to be applied, a statement to that effect is given in this particular standard.

Copyright British Standards Institution
Provided by IHS under license with BSI - Uncontrolled Copy
No reproduction or networking permitted without license from IHS
Licensee=Hill Rom Inc/0078415001, User=Laloge, Dennis
Not for Resale, 10/29/2015 08:09:16 MDT

201.2 Normative references

NOTE Informative references are listed in the bibliography on page 81.

Clause 2 of the general standard applies except as follows:

Addition:

IEC 60068-2-31:2008, *Environmental testing – Part 2-31: Tests – Test Ec: Rough handling shocks, primarily for equipment-type specimens*

201.3 Terms and definitions

For the purposes of this document, the terms and definitions given in IEC 60601-1:2005 apply, except as follows:

NOTE An index of defined terms is found beginning on page 82.

201.3.8
APPLIED PART

Addition:

The APPLIED PART includes all parts of the MEDICAL BED that are within reach of the PATIENT, even if they are underneath the MATTRESS SUPPORT SURFACE (see Figure 201.101)

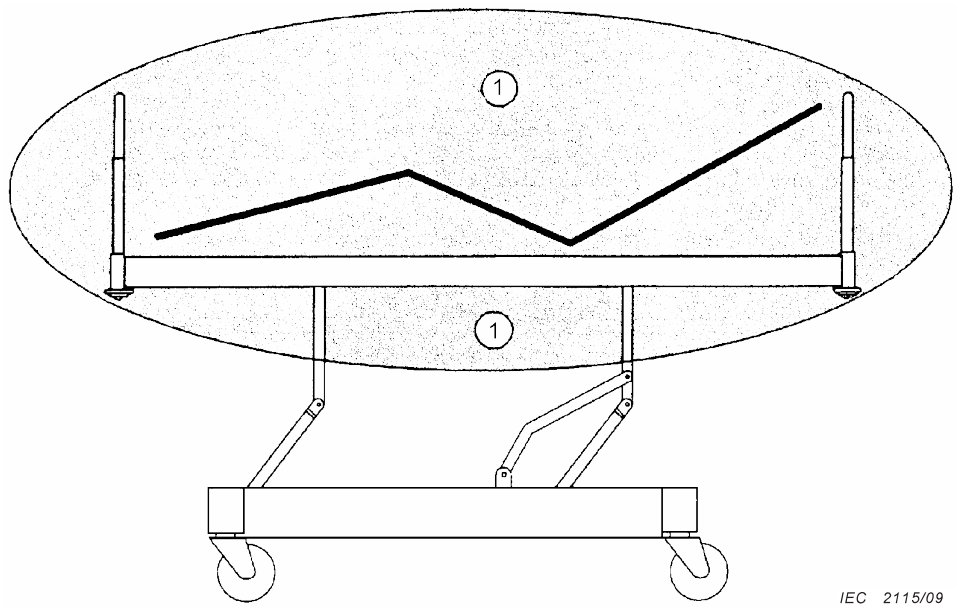

Key

1 Region of APPLIED PART including ACCESSORIES

Figure 201.101 – APPLIED PART

201.3.76
PATIENT

Replacement:

person undergoing a medical procedure or DISABLED PERSON

Copyright British Standards Institution
Provided by IHS under license with BSI - Uncontrolled Copy
No reproduction or networking permitted without license from IHS
Licensee=Hill Rom Inc/0078415001, User=Laloge, Dennis
Not for Resale, 10/29/2015 08:09:16 MDT

201.3.131
*** TRAPPING ZONE**

Addition:

locations where the body of a MEDICAL BED occupant can become entrapped, entangled, wedged, or stuck in or between parts of the MEDICAL BED, such as the SIDE RAILS, HEAD/FOOT BOARD, MATTRESS SUPPORT PLATFORM or mattress

Addition:

201.3.201
*** APPLICATION ENVIRONMENT 1**
intensive/critical care provided in a hospital where 24 h medical supervision and constant monitoring is required and provision of life support system/equipment used in medical procedures is essential to maintain or improve the vital functions of the PATIENT

201.3.202
*** APPLICATION ENVIRONMENT 2**
acute care provided in a hospital or other medical facility where medical supervision and monitoring is required and ME EQUIPMENT used in medical procedures is often provided to help maintain or improve the condition of the PATIENT

201.3.203
*** APPLICATION ENVIRONMENT 3**
long-term care in a medical area where medical supervision is required and monitoring is provided if necessary and ME EQUIPMENT used in medical procedures may be provided to help maintain or improve the condition of the PATIENT

NOTE This includes use in nursing homes and in rehabilitation and geriatric facilities.

201.3.204
*** APPLICATION ENVIRONMENT 4**
care provided in a domestic area where ME EQUIPMENT is used to alleviate or compensate for an injury, disability or disease

NOTE This excludes use in all other APPLICATION ENVIRONMENTs (e.g. nursing homes, rehabilitation and geriatric facilities) when a MEDICAL BED is purely designed for APPLICATION ENVIRONMENT 4.

201.3.205
*** APPLICATION ENVIRONMENT 5**
outpatient (ambulatory) care, which is provided in a hospital or other medical facility, under medical supervision where ME EQUIPMENT, is provided for the need of persons with illness, injury or disability for treatment, diagnosis or monitoring

201.3.206
BED-LIFT
height adjustable mechanism on which a MATTRESS SUPPORT PLATFORM can be mounted

NOTE The combination of a BED LIFT and a compatible non-MEDICAL BED as specified by the MANUFACTURER is considered to be a MEDICAL BED.

201.3.207
DISABLED PERSON
person with one or more impairments, one or more activity limitations, one or more participation restrictions or a combination thereof

[ISO 9999:2007]

Copyright British Standards Institution
Provided by IHS under license with BSI - Uncontrolled Copy
No reproduction or networking permitted without license from IHS
Licensee=Hill Rom Inc/0078415001, User=Laloge, Dennis
Not for Resale, 10/29/2015 08:09:16 MDT

201.3.208
HEAD/FOOT BOARD
assembly/assemblies mounted to MEDICAL BED, which identifies for the PATIENT the edge of the head or foot end of the MEDICAL BED and/or MATTRESS SUPPORT PLATFORM

NOTE It may be used as handles to push a MEDICAL BED intended to transport PATIENTS.

201.3.209
LIFTING POLE
ACCESSORY attached to a MEDICAL BED and intended to assist support of a PATIENT when changing position by providing a gripping support above the PATIENT

201.3.210
MATTRESS OVERLAY
supplementary mattress (support surface), which is intended to be placed on an existing mattress, and generally used for prophylactic or therapeutic effect

201.3.211
MATTRESS SUPPORT PLATFORM
structure which supports a PATIENT surface (for example mattress)

NOTE It can articulate or change positions to facilitate various therapeutic, diagnostic and convenience positions (See Figures 201.102 and 201.119 a) to 201.119 d)).

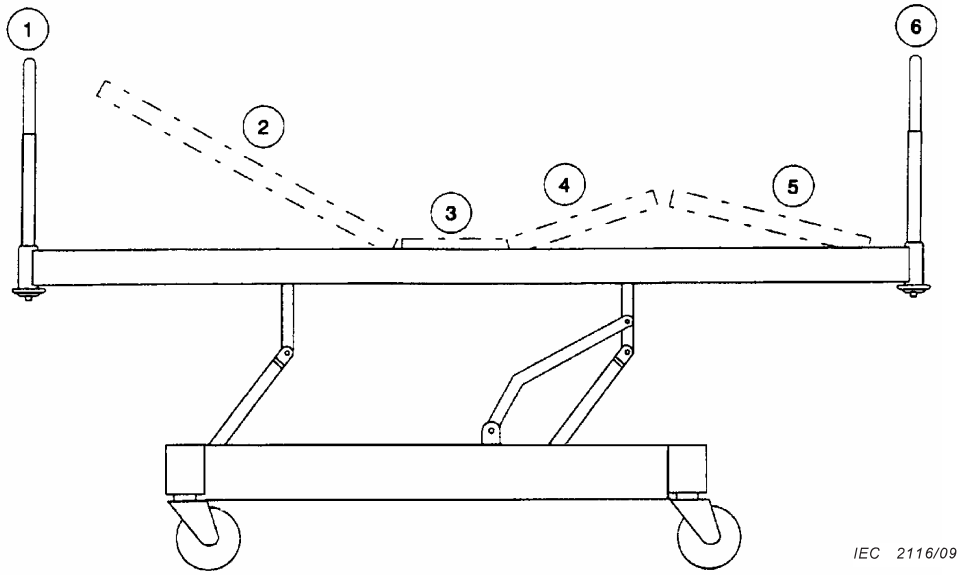

Key

1 HEAD BOARD
2 Back section
3 Seat section
4 Upper leg section
5 Lower leg section
6 FOOT BOARD

Figure 201.102 – MEDICAL BED, general arrangement (example, schematic presentation only)

Copyright British Standards Institution
Provided by IHS under license with BSI - Uncontrolled Copy
No reproduction or networking permitted without license from IHS
Licensee=Hill Rom Inc/0078415001, User=Laloge, Dennis
Not for Resale, 10/29/2015 08:09:16 MDT

201.3.212
*** MEDICAL BED**
device for which the INTENDED USE is sleeping/resting that contains a MATTRESS SUPPORT PLATFORM and intended to assist in diagnosis, monitoring, prevention, treatment, alleviation of disease or compensation for an injury or handicap

NOTE 1 A BED-LIFT and/or a detachable MATTRESS SUPPORT PLATFORM in combination with a compatible non-MEDICAL BED as specified by the MANUFACTURER is also considered a MEDICAL BED.

NOTE 2 Excluded are devices for which the INTENDED USE is mainly for examination or transportation under medical supervision (e.g. stretcher, examination table).

201.3.213
MOTION LOCKOUT CONTROL
auxiliary subsystem that deactivates motion controls

201.3.214
PENDANT CONTROL
handheld device, which has a FUNCTIONAL CONNECTION to the MEDICAL BED, controlling at least MEDICAL BED articulations and/or movements

NOTE PENDANT CONTROLS may be wired, or wireless, and may integrate other functions, (e.g. communications, radio/tv, etc.).

201.3.215
SIDE RAIL
physical barrier, which may be a detachable ACCESSORY or integral to the overall construction of a MEDICAL BED and is mounted to the side(s) of the MEDICAL BED

NOTE When a SIDE RAIL is located in the "up" position it provides a physical barrier, which is intended to reduce the RISK of the PATIENT accidentally slipping or rolling off the mattress.

201.3.216
SPECIALTY MATTRESS
mattress intended for prophylactic or therapeutic effect

201.3.217
TEST BED BOARD
flat, rigid loading board of dimensions as specified by the MANUFACTURER representing the dimensions of the MEDICAL BED

201.3.218
UNDERCARRIAGE
all components of the MEDICAL BED or BED-LIFT below the MATTRESS SUPPORT PLATFORM

A1 **201.3.219**
*** ADULT**
PATIENT having a physical size equal to or more than 146 cm, a mass equal to or more than 40 kg and a body mass index (BMI) equal to or more than 17 A1

Copyright British Standards Institution
Provided by IHS under license with BSI - Uncontrolled Copy
No reproduction or networking permitted without license from IHS
Licensee=Hill Rom Inc/0078415001, User=Laloge, Dennis
Not for Resale, 10/29/2015 08:09:16 MDT

201.4 General requirements

A1 Clause 4 of the general standard applies, except as follows:

201.4.2.2 * General requirement for RISK MANAGEMENT

Addition:

The MANUFACTURER shall include, in the RISK MANAGEMENT PROCESS, HAZARDS related to PATIENTS taller than 185 cm.

Compliance is checked by inspection of the RISK MANAGEMENT FILE. A1

201.5 General requirements for testing of ME EQUIPMENT

Clause 5 of the general standard applies, except as follows:

Additional subclauses:

201.5.101 * Entrapment test tools

Figures 201.103a and 201.103b illustrate entrapment test tools (a cone tool and a cylinder tool respectively).

A1

Dimensions in millimetres

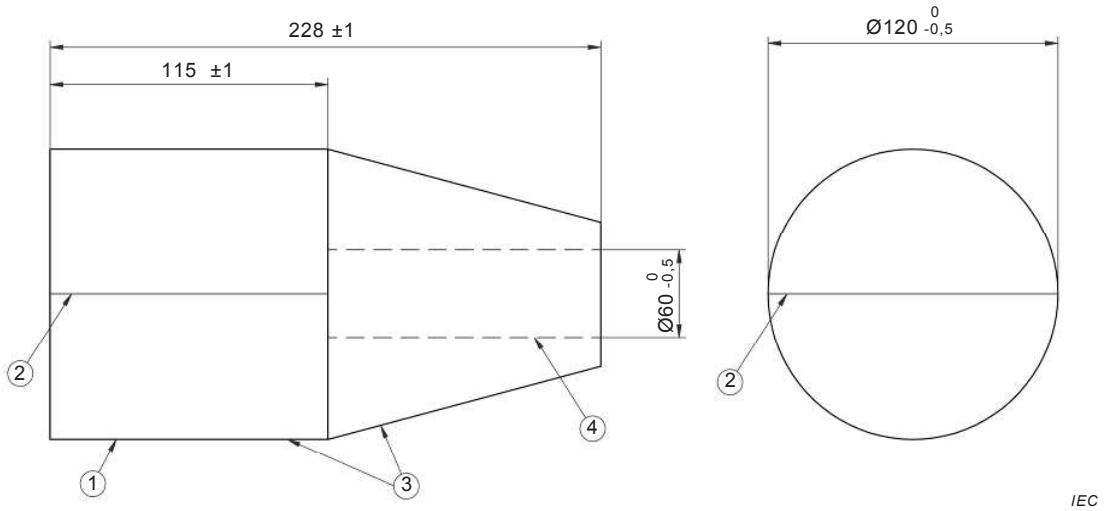

Key

1 Total weight 5,1 kg ±0,05 kg

2 Marked centre line

3 Surface roughness 1,6

4 Drilling hole for weight adjustment

Figure 201.103a) – Cone tool schematic A1

Copyright British Standards Institution
Provided by IHS under license with BSI - Uncontrolled Copy
No reproduction or networking permitted without license from IHS
Licensee=Hill Rom Inc/0078415001, User=Laloge, Dennis
Not for Resale, 10/29/2015 08:09:16 MDT

A1

Dimensions in millimetres

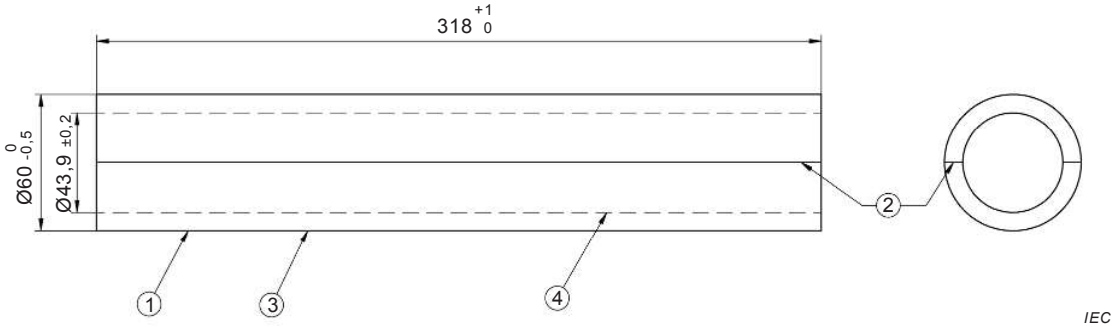

Key

1 Total weight 3,34 kg ±0,05 kg

2 Marked centre line

3 Surface roughness 1,6

4 Drilling hole for weight adjustment

Figure 201.103b) – Cylinder tool schematic A1

Figure 201.103 – Entrapment test tools

201.5.102 Loading pad

The loading pad (see Figure 201.104) is a rigid circular object, (355+/–5) mm in diameter, the face of which has a convex spherical curvature of 800 mm radius with a 20 mm front edge radius.

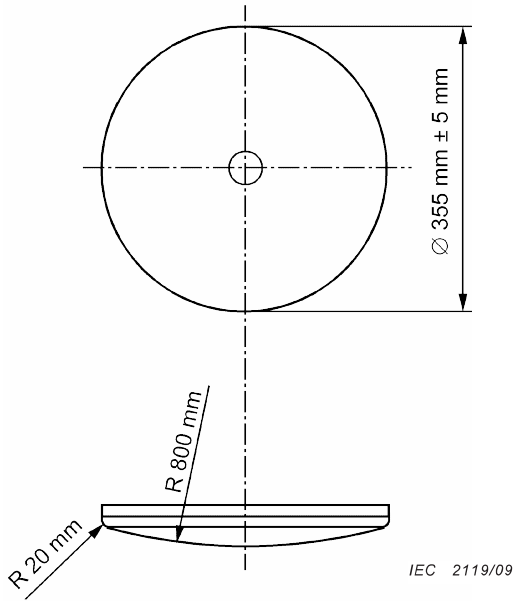

Figure 201.104 – Loading pad

Copyright British Standards Institution
Provided by IHS under license with BSI - Uncontrolled Copy
No reproduction or networking permitted without license from IHS
Licensee=Hill Rom Inc/0078415001, User=Laloge, Dennis
Not for Resale, 10/29/2015 08:09:16 MDT

201.6 Classification of ME EQUIPMENT and ME SYSTEMS

Clause 6 of the general standard applies, except as follows:

201.6.2 * Protection against electrical shock

Addition:

For APPLICATION ENVIRONMENT 4, the MEDICAL BED shall be CLASS II.

201.7 ME EQUIPMENT identification, marking and documents

Clause 7 of the general standard applies, except as follows:

201.7.2.2 Identification

Replacement of the first paragraph:

The MEDICAL BED shall be marked with the name or trademark and address of the MANUFACTURER, MODEL OR TYPE REFERENCE and means to allow traceability.

The detachable components shall be marked with the name or trademark and address of the MANUFACTURER, MODEL OR TYPE REFERENCE and means to allow traceability unless mis-identification does not present an unacceptable RISK.

Additional subclauses:

201.7.2.2.101 * Marking of maximum PATIENT weight and SAFE WORKING LOAD

The MEDICAL BED shall be marked with the corresponding maximum PATIENT weight (see 201.9.8.3.1) and SAFE WORKING LOAD (for symbol see Figure 201.105).

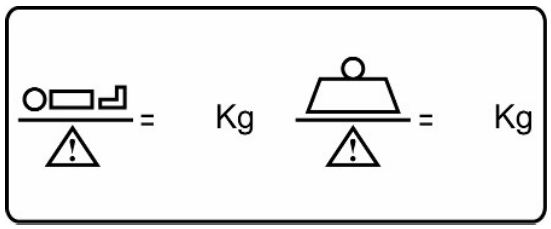

IEC 2120/09

Figure 201.105 – Graphic symbol for maximum PATIENT weight and SAFE WORKING LOAD

Detachable parts of a MEDICAL BED of a mass of more than 20 kg shall be marked with symbol ISO 7000-1321 (2004-01): .

201.7.2.2.102 Marking for machine washable MEDICAL BEDS by an automatic washing system

MEDICAL BEDS intended for use with an automatic washing system shall be marked with the following text to distinguish them from MEDICAL BEDS which cannot tolerate such cleaning methods: “Caution, for cleaning purposes this bed can be used with automatic washing systems.”

Copyright British Standards Institution
Provided by IHS under license with BSI - Uncontrolled Copy
No reproduction or networking permitted without license from IHS
Licensee=Hill Rom Inc/0078415001, User=Laloge, Dennis
Not for Resale, 10/29/2015 08:09:16 MDT

201.7.2.2.103 Marking for MEDICAL BEDS intended for jet stream washing

MEDICAL BEDS intended for use with jet stream washing shall be marked with the following text: "Caution, for cleaning purposes this bed can be used with jet stream washing."

201.7.2.2.104 Width of carriage of BED-LIFT

If a BED-LIFT has an adjustable width carriage, the range shall be marked, e.g. by linear measurement indicator fixed to the adjustable parts.

201.7.2.2.105 * Marking of replacement mattresses

MEDICAL BEDS designed to have replacement mattresses shall be marked with the following sentence as a warning: "Incompatible mattresses can create hazards. Read instructions for use" or a symbol as appropriate on a prominent place on the MATTRESS SUPPORT PLATFORM indicating the compatible mattresses (see example in AA.1).

201.7.2.2.106 * Marking of detachable SIDE RAILS

MEDICAL BEDS designed to have detachable SIDE RAILS shall be marked with the following sentence as a warning: "Incompatible SIDE RAILS can create HAZARDS. Read instructions for use" or use a symbol as appropriate on a prominent place near the attachment point of the SIDE RAIL, indicating the compatible SIDE RAILS (see example in AA.2).

A1 **201.7.2.2.107 Marking on the MEDICAL BED for ADULTS**

The MEDICAL BEDS shall be marked on a prominent place with the symbol indicated in Figure 201.106.

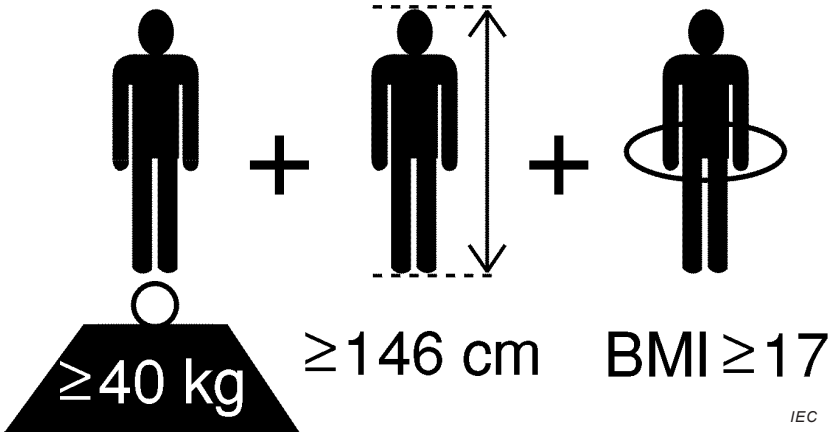

Figure 201.120 – Physical description of an ADULT A1

201.7.2.4 ACCESSORIES

Addition:

Where an overload on an ACCESSORY that is intended to support loads can create an unacceptable RISK, the corresponding SAFE WORKING LOAD shall be marked on the ACCESSORY.

Compliance is checked by inspection.

201.7.4.2 Control devices

Addition:

Copyright British Standards Institution
Provided by IHS under license with BSI - Uncontrolled Copy
No reproduction or networking permitted without license from IHS
Licensee=Hill Rom Inc/0078415001, User=Laloge, Dennis
Not for Resale, 10/29/2015 08:09:16 MDT

Where reliance to prevent unintended movement of the MATTRESS SUPPORT PLATFORM is based on a MOTION LOCKOUT CONTROL which requires activation by the OPERATOR, this shall be disclosed by markings or symbols as appropriate on the outside of the MEDICAL BED and which are visible from a position of NORMAL USE (see Figure 201.106).

NOTE Example: "Engage the MOTION LOCKOUT CONTROL if a patient could be injured due to inadvertent motion of the MATTRESS SUPPORT PLATFORM."

Compliance is checked by inspection of the MEDICAL BED.

201.7.6.3 Symbols for controls and performance

Addition:

Controls and/or indicators, when possible, shall be marked using symbols that convey the intended function of those controls or indicators without the need for additional text.

NOTE Figure 201.106 is intended as a guideline when designing these symbols. In all cases where standard international symbols exist, they should be used.

Copyright British Standards Institution
Provided by IHS under license with BSI - Uncontrolled Copy
No reproduction or networking permitted without license from IHS
Licensee=Hill Rom Inc/0078415001, User=Laloge, Dennis
Not for Resale, 10/29/2015 08:09:16 MDT

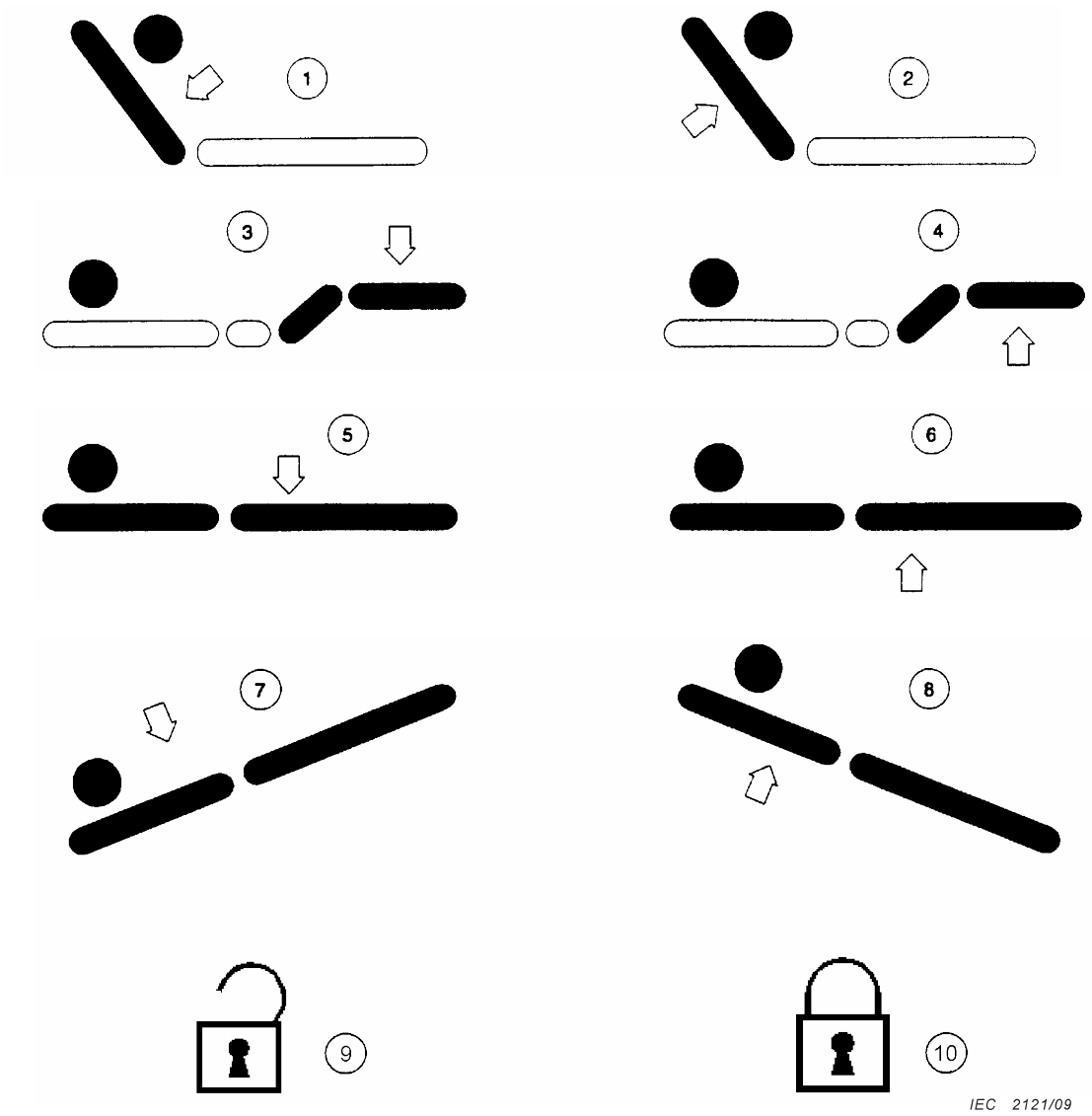

Key

1 Back section down function

2 Back section up function

3 Leg down function

4 Leg up function

5 MATTRESS SUPPORT PLATFORM down

6 MATTRESS SUPPORT PLATFORM up

7 Trendelenburg

8 Anti-Trendelenburg/reverse Trendelenburg

9 Padlock-symbol (unlocked) for MOTION LOCKOUT CONTROL

10 Padlock-symbol (locked) for MOTION LOCKOUT CONTROL

Figure 201.106 – MEDICAL BED function controls and/or actuators: guidelines for creating graphic symbols

Copyright British Standards Institution
Provided by IHS under license with BSI - Uncontrolled Copy
No reproduction or networking permitted without license from IHS
Licensee=Hill Rom Inc/0078415001, User=Laloge, Dennis
Not for Resale, 10/29/2015 08:09:16 MDT

201.7.9.2 Instructions for use

201.7.9.2.1 General

Addition:

The instructions for use shall include:

a) a description according to 201.3. of the intended APPLICATION ENVIRONMENT(S);

b) the maximum PATIENT weight and SAFE WORKING LOAD. The SAFE WORKING LOAD is the sum of:

- the PATIENT;
- the mattress;
- the ACCESSORIES of the MEDICAL BED (only if they are supported by the support system of the MEDICAL BED); and
- the load supported by those ACCESSORIES (excluding PATIENT weight);

c) an explanation of how to deactivate any MEDICAL BED function if movement caused by that function could cause injury to the PATIENT;

d) for APPLICATION ENVIRONMENT 4 intended MEDICAL BEDS, the result of the measurement of auditable acoustic energy in accordance with ISO 3746.

A1 e) a description of the intended PATIENT group(s). A1

201.7.9.2.2 Warning and safety notices

Addition:

a) The instructions for use shall provide a warning that the MEDICAL BED should be left in its lowest position when the PATIENT is unattended in order to reduce RISK of injury due to falls.

b) The instructions for use shall provide a warning on HAZARDS caused by inappropriate handling of the POWER SUPPLY CORD, e. g. by kinking, shearing or other mechanical damages.

c) The instructions for use shall provide a warning, stating that when routing cables from other equipment in the MEDICAL BED, precautions shall be taken to avoid squeezing those between parts of the MEDICAL BED.

d) The instructions for use shall provide a warning if a MEDICAL BED shall only be used with certain hoists, because of the limited space underneath the MEDICAL BED.

A1 e) The instructions for use shall provide a warning if a MEDICAL BED is limited to a specific group of PATIENTS.

f) The instructions for use shall provide a warning that incompatible SIDE RAILS and mattresses can cause an entrapment hazard. A1

201.7.9.2.5 ME EQUIPMENT description

Addition:

201.7.9.2.5.101 Selection of mattress

The instructions for use shall contain information on the selection of mattress(es), including mattress dimensions and mattress characteristics (e.g. to reduce the RISK of entrapment and falls (see also 201.7.2.2.105)).

201.7.9.2.5.102 Selection of SIDE RAILS

The instructions for use shall contain information on the selection of SIDE RAILS, including SIDE RAIL dimensions and SIDE RAIL characteristics (e.g. to reduce the RISK of entrapment and falls (see also 201.7.2.2.106)).

Copyright British Standards Institution
Provided by IHS under license with BSI - Uncontrolled Copy
No reproduction or networking permitted without license from IHS
Licensee=Hill Rom Inc/0078415001, User=Laloge, Dennis
Not for Resale, 10/29/2015 08:09:16 MDT

201.7.9.2.5.103 * Angles and height of MEDICAL BED

The instructions for use shall identify the maximum angles, which can be achieved in NORMAL USE by each part of the MATTRESS SUPPORT PLATFORM with reference to horizontal. They shall also identify the maximum and minimum heights from the floor which can be achieved by the MATTRESS SUPPORT PLATFORM in NORMAL USE. They shall also identify any emergency position(s) and the controls by which such position(s) are obtained.

201.7.9.2.5.104 * Maximum mass of MEDICAL BED

The instructions for use shall identify the maximum mass (in kg) of the MEDICAL BED. If the MEDICAL BED is intended to be disassembled into parts, the maximum mass (in kg) of any parts shall be stated in the instructions for use.

201.7.9.2.13 Maintenance

Replacement:

The instruction for use shall instruct the OPERATOR or RESPONSIBLE ORGANIZATION in sufficient detail concerning preventive inspection, maintenance and calibration to be performed by them, including the frequency of such maintenance.

The instruction for use shall provide information for the safe performance of such routine maintenance necessary to ensure the continued safe use of the MEDICAL BED.

Additionally, the instructions for use shall identify the parts on which preventive inspection and maintenance shall be performed by SERVICE PERSONNEL, including the periods to be applied and details about the actual performance of such maintenance.

For MEDICAL BEDS containing rechargeable batteries that are intended to be maintained by anyone other than SERVICE PERSONNEL, the instruction for use shall contain instructions to ensure adequate maintenance.

201.8 Protection against electrical HAZARDS from ME EQUIPMENT

Clause 8 of the general standard applies, except as follows:

201.8.11.3.2 Types

Replacement:

POWER SUPPLY CORDS shall be a minimum 2,5 m measured from the plug to the outside perimeter of the MEDICAL BED.

POWER SUPPLY CORDS and other external flexible mains cables and cords on MEDICAL BEDS shall be type HD22.10 H05-BQ-F [1][3)] or equivalent quality for mechanical robustness.

POWER SUPPLY CORDS shall be equipped with appropriate strain relief and bend protection.

POWER SUPPLY CORD sets shall have a moulded-on plug or other means to withstand the ingress of water during the cleaning PROCESS for which the MEDICAL BED is intended.

The MEDICAL BED shall be equipped with a means to keep the POWER SUPPLY CORD clear of any moving MEDICAL BED part or mechanism, when the MEDICAL BED is in use, transport or not in use to avoid a damage of the POWER SUPPLY CORD.

3) Figures in square brackets refer to the bibliography.

Copyright British Standards Institution
Provided by IHS under license with BSI - Uncontrolled Copy
No reproduction or networking permitted without license from IHS
Licensee=Hill Rom Inc/0078415001, User=Laloge, Dennis
Not for Resale, 10/29/2015 08:09:16 MDT

POWER SUPPLY CORDS shall be adequately protected against damages from contact with moving part(s) or from friction at sharp corners and edges within the MEDICAL BED.

Compliance is checked by inspection.

201.9 Protection against MECHANICAL HAZARDS of ME EQUIPMENT and ME SYSTEMS

Clause 9 of the general standard applies, except as follows:

201.9.1 * MECHANICAL HAZARDS of ME EQUIPMENT

Addition:

201.9.1.101 * Protection against PATIENT entrapment in non-moving parts

Any openings or areas (A_1, A_2, A_3, A_4, A_5, A_6, B, C and D) within the MEDICAL BED system and which are above the MATTRESS SUPPORT PLATFORM shall meet the dimensional and constructional requirements of Figures 201.107, 201.108 and Table 201.101. Where a RISK of PATIENT entrapment exists and is addressed in another way this shall be justified by the MANUFACTURER in the RISK MANAGEMENT FILE.

Compliance is checked before and after application of the SIDE RAIL strength and latch reliability tests (see 201.9.8.3.3.3).

Compliance is checked with the MATTRESS SUPPORT PLATFORM in the flat position unless otherwise noted as indicated in Table 201.101. The test shall be performed with the SIDE RAIL in all raised and locked positions.

All the tests are performed without the mattress except the test for Dimension D. Requirements involving the mattress are checked with the mattress(es) as specified by the MANUFACTURER. Requirements of Figures 201.107, 201.108 and Table 201.101 involving the mattress are excluded for SPECIALTY MATTRESSES.

A RISK ASSESSMENT shall be performed to evaluate:

- SPECIALTY MATTRESSES;
- MATTRESS OVERLAYS;
- ACCESSORIES;
- articulated MATTRESS SUPPORT PLATFORM positions.

Compliance is checked by the following tests and inspection of the RISK MANAGEMENT FILE.

Copyright British Standards Institution
Provided by IHS under license with BSI - Uncontrolled Copy
No reproduction or networking permitted without license from IHS
Licensee=Hill Rom Inc/0078415001, User=Laloge, Dennis
Not for Resale, 10/29/2015 08:09:16 MDT

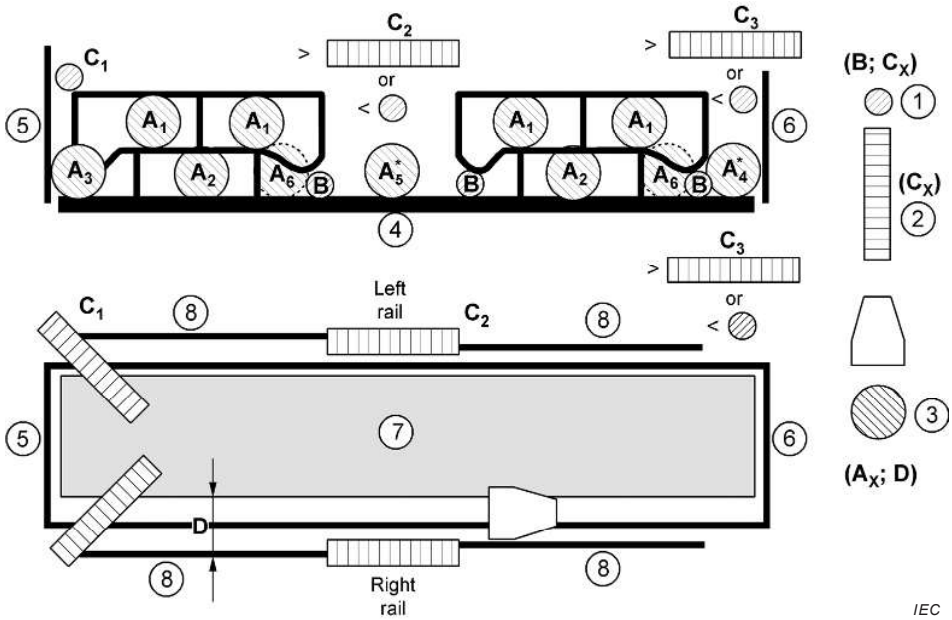

Only applies when the area C above is < 60 mm.

A_x represents the different areas A_1, A_2, A_3, A_4, A_5 and A_6

Key

1 Area of TOOL representing neck diameter (60 mm).

2 Area of TOOL representing chest breadth (318 mm).

3 Area of TOOL representing head breadth (120 mm).

4 MATTRESS SUPPORT PLATFORM

5 HEAD BOARD

6 FOOT BOARD

7 Mattress

8 SIDE RAIL

Figure 201.107 – Example of MEDICAL BED with segmented or split SIDE RAIL

Copyright British Standards Institution
Provided by IHS under license with BSI - Uncontrolled Copy
No reproduction or networking permitted without license from IHS
Licensee=Hill Rom Inc/0078415001, User=Laloge, Dennis
Not for Resale, 10/29/2015 08:09:16 MDT

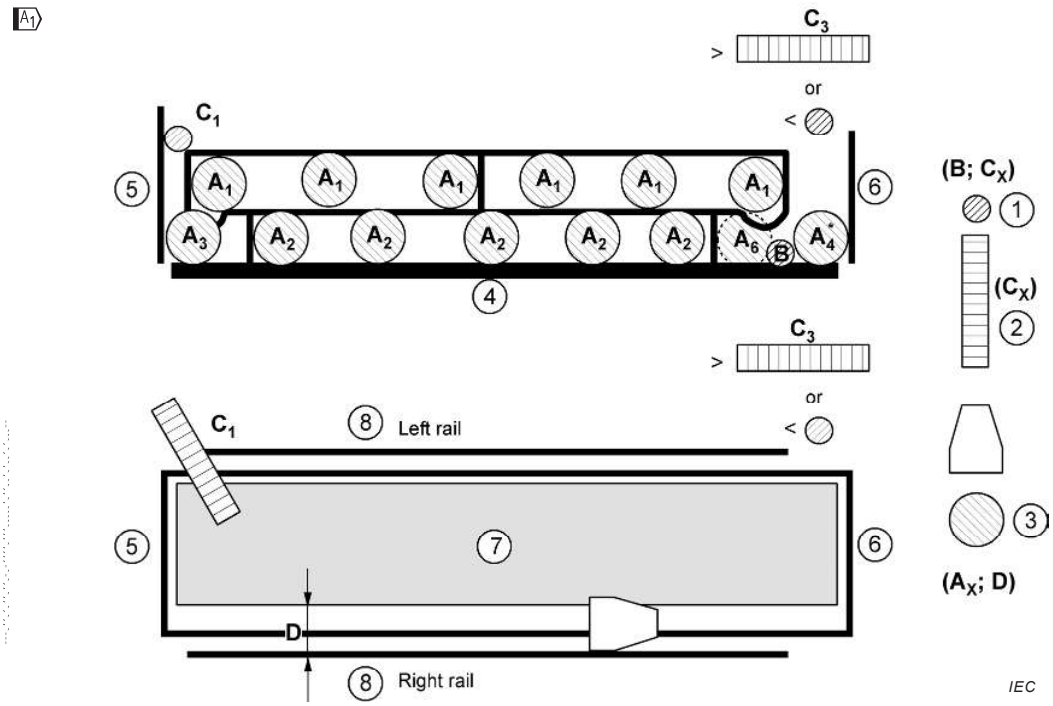

Only applies when the area C is < 60 mm.

Key

1 Area of TOOL representing neck diameter (60 mm).

2 Area of TOOL representing chest breadth (318 mm).

3 Area of TOOL representing head breadth (120 mm).

4 MATTRESS SUPPORT PLATFORM

5 HEAD BOARD

6 FOOT BOARD

7 Mattress

8 SIDE RAIL

Figure 201.108 – Example of MEDICAL BED with single piece SIDE RAIL

Copyright British Standards Institution
Provided by IHS under license with BSI - Uncontrolled Copy
No reproduction or networking permitted without license from IHS
Licensee=Hill Rom Inc/0078415001, User=Laloge, Dennis
Not for Resale, 10/29/2015 08:09:16 MDT

Table 201.101 – Protection against PATIENT entrapment

Area	Description	Requirement/Compliance method
A_1	Fully enclosed openings within a SIDE RAIL, HEAD or FOOT BOARD	Gap is specified to be less than 120 mm as defined by the following test. *Compliance is checked by the following test:* *Except for A_3 articulate the MEDICAL BED and find the largest opening. Insert 60 mm diameter part of cone tool (see Figure 201.103a, See Figures 201.107 and 201.108) through opening from inside of the MEDICAL BED system. Bring cone tool to bear on opening of interest. Exert 250 N force applied to 60 mm cylindrical end of cone tool in most disadvantageous direction.* *Pass/fail criterion: Opening shall not allow 120 mm diameter part of cone tool to enter and pass through.*
A_2	Fully enclosed opening defined by the SIDE RAIL, its supports, and the MATTRESS SUPPORT PLATFORM	
A_3	Partially enclosed opening defined by the HEAD BOARD, MATTRESS SUPPORT PLATFORM, and SIDE RAIL	
A_4	Partially enclosed opening defined by the FOOT BOARD, MATTRESS SUPPORT PLATFORM, and SIDE RAIL (except where the gap between the SIDE RAIL and the FOOT BOARD > 318 mm)	
A_5	Partially enclosed opening between segmented or split SIDE RAILS and the MATTRESS SUPPORT PLATFORM (except where the gap between the SIDE RAILS is > 318 mm)	
A_6	Partially enclosed opening defined by the lowest point of a SIDE RAIL, the adjacent SIDE RAIL support, and MATTRESS SUPPORT PLATFORM, to the outside of the SIDE RAIL supports.	
A	Other opening(s) defined by ACCESSORIES (e.g., IV poles, fracture frames) and SIDE RAILS, HEAD/FOOT BOARDS, and/or MATTRESS SUPPORT PLATFORM. This is not in Figure 201.107 and Figure 201.108 as it depends on the position of ACCESSORIES and construction of the MEDICAL BED.	
B	Distance between the MATTRESS SUPPORT PLATFORM and the lowest point of the SIDE RAIL outside of the SIDE RAIL support. **AND** The angle between SIDE RAIL and the MATTRESS SUPPORT PLATFORM at the range of the mattress height defined by the MANUFACTURER ± 2 cm. NOTE ± 2 cm takes into account mattress compression and height of the neck above the mattress.	Gap < 60 mm. **AND** Angle between MATTRESS SUPPORT PLATFORM and the SIDE RAIL interface >60° over the entire range of mattress heights from the minimum recommended mattress height, minus 2 cm. to the maximum recommended mattress height, plus 2 cm. NOTE The RISK MANAGEMENT has to address the possibility of the use of a mattress not specified by the MANUFACTURER. RISK MANAGEMENT to address the entrapment condition of area B (as illustrated in Figure AA.13) should be performed, taking the following into consideration: i) The SIDE RAIL shape and geometry. ii) The distance between the lowest point of the SIDE RAIL and the MATTRESS SUPPORT PLATFORM. iii) The mattress material properties. iv) The mattress dimensions. v) The fit relationship between the SIDE RAIL, mattress and MATTRESS SUPPORT PLATFORM. *Compliance is checked by inspection of the RISK MANAGEMENT FILE. See also Annex CC for further information.*
C_1	Gap between the HEAD BOARD and adjacent SIDE RAIL.	Gap between the HEAD BOARD and adjacent SIDE RAIL is required to be < 60 mm. *Compliance for a gap < 60 mm is checked by the following test:*

Copyright British Standards Institution
Provided by IHS under license with BSI - Uncontrolled Copy
No reproduction or networking permitted without license from IHS
Licensee=Hill Rom Inc/0078415001, User=Laloge, Dennis
Not for Resale, 10/29/2015 08:09:16 MDT

Area	Description	Requirement/Compliance method
		The cylinder tool (see Figure 201.103b) shall be oriented parallel to floor, in the most disadvantageous angle in the horizontal plane above the gap. The 60 mm cylinder tool shall rest with the full weight on the gap where the cylinder tool intersects. Extra vertical force shall not be used. The cylinder tool shall not be used to pry apart parts of the MEDICAL BED. *Pass/fail criterion:* *The 60 mm cylinder tool shall not slide into the opening. See Annex CC for further clarification.* SEE ALSO ANNEX CC FOR FURTHER INFORMATION.
C_2	Gap between segmented or split SIDE RAILS with both SIDE RAILS raised.	Gap between segmented or split SIDE RAILS with both SIDE RAILS raised is required to be < 60 mm **or** > 318 mm. *Compliance for a gap < 60 mm is checked by the following test:* *The cylinder tool (see Figure 201.103b) shall be oriented parallel to floor, in the most disadvantageous angle in the horizontal plane above the gap. The 60 mm cylinder tool shall rest with the full weight on the gap where the cylinder intersects. Extra vertical force shall not be used. The cylinder tool shall not be used to pry apart parts of the* MEDICAL BED. *For* MEDICAL BED *with split* SIDE RAILS, *articulate the* MATTRESS SUPPORT PLATFORM *to identify the worst case opening between the* SIDE RAILS *and perform the test.* *Pass/fail criterion:* *The 60 mm cylinder tool shall not slide into the opening. See Annex CC for further clarification.* **OR** For a gap > 318 mm: The gap shall be > 318 mm for the entire vertical distance. *See Annex CC for further information.*

Copyright British Standards Institution
Provided by IHS under license with BSI - Uncontrolled Copy
No reproduction or networking permitted without license from IHS
Licensee=Hill Rom Inc/0078415001, User=Laloge, Dennis
Not for Resale, 10/29/2015 08:09:16 MDT

Area	Description	Requirement/Compliance method
C_3	Gap between SIDE RAIL and FOOTBOARD. Other openings(s) defined by ACCESSORIES (e.g. IV poles, fractures frames,.....) and SIDE RAILS, HEAD BOARD, FOOT BOARD, and / or MATTRESS SUPPPORT PLATFORM.	Gap between SIDE RAIL and FOOTBOARD is required to be < 60 mm **OR** > 318 mm. *Compliance for a gap < 60 mm is checked by the following test:* *The cylinder tool (see Figure 201.103b) shall be oriented parallel to floor, in the most disadvantageous angle in the horizontal plane above the gap. The 60 mm cylinder tool shall rest with the full weight on gap where the cylinder intersects. Extra vertical force shall not be used. The cylinder tool shall not be used to pry apart parts of the MEDICAL BED.* *Pass/fail criterion:* *The 60 mm cylinder tool shall not slide into the opening. See Annex CC for further clarification.* **OR** For a gap > 318 mm: The gap shall be > 318 mm for the entire vertical distance. *SEE ANNEX CC FOR FURTHER INFORMATION.*
D	Region defined between the SIDE RAIL and the mattress.	*Compliance is checked by the following test:* *Push the mattress away from the SIDE RAIL being measured until the mattress retention system, or the opposing SIDE RAIL stops the mattress. Pull outward on the SIDE RAIL to remove any lateral play and during application of the force the cone tool (see Figure 201.103a) is placed with its longitudinal axis parallel to the SIDE RAIL, resting on the mattress in the horizontal gap between the SIDE RAIL and mattress. Turn the cone tool until the line on the face of the 120 mm diameter end is horizontal. Let the cone tool sink into the space by its own weight.* *If a mattress retention system, SIDE RAIL support or other structure keeps the cone tool from sinking in the gap, the cone tool shall be placed at a different location along the SIDE RAIL where there is no interference.* *Pass/fail criterion:* *The large end of the cone tool shall not sink below the mattress surface by 50 % or more of its 120 mm diameter.* NOTE The gap between HEADBOARD and MATTRESS SUPPORT PLATFORM is covered by the measurement of A (See designator A: other opening(s) defined by ACCESSORIES (e.g., IV poles, fracture frames) and SIDE RAILS, HEAD/FOOT BOARDS, and/or MATTRESS SUPPORT PLATFORM. This is not in Figure 201.107 or Figure 201.108 as it depends on the construction of the MEDICAL BED) Gap between HEADBOARD and top of mattress: The mattresses specified by the MANUFACTURER normally have no reasonable gaps between HEADBOARD and top end of mattresses for a possible head entrapment.

Copyright British Standards Institution
Provided by IHS under license with BSI - Uncontrolled Copy
No reproduction or networking permitted without license from IHS
Licensee=Hill Rom Inc/0078415001, User=Laloge, Dennis
Not for Resale, 10/29/2015 08:09:16 MDT

201.9.2.2 TRAPPING ZONE

201.9.2.2.1 General

Addition:

The entire region in the UNDERCARRIAGE shall be considered in the RISK ANALYSIS with regard to trapping HAZARDS due to high/low motion.

Compliance is checked by inspection of the RISK MANAGEMENT FILE.

201.9.2.2.2 Gaps

Amendment:

The locations identified in Figure 201.109 and 201.110 shall be considered as TRAPPING ZONES for fingers.

Distances between moving parts shall always be either less than 8 mm or more than 25 mm (as dimensioned in Figure 201.109). The 200 mm cross-hatched area represents the areas of normal reach around the perimeter of the MATTRESS SUPPORT PLATFORM. The 200 mm distance can be measured taking into account any barrier preventing access to fingers (see Figure 201.110). The region within the APPLIED PART and above the MATTRESS SUPPORT PLATFORM shall be considered in the RISK ANALYSIS with regard to finger spacing between moving parts.

Copyright British Standards Institution
Provided by IHS under license with BSI - Uncontrolled Copy
No reproduction or networking permitted without license from IHS
Licensee=Hill Rom Inc/0078415001, User=Laloge, Dennis
Not for Resale, 10/29/2015 08:09:16 MDT

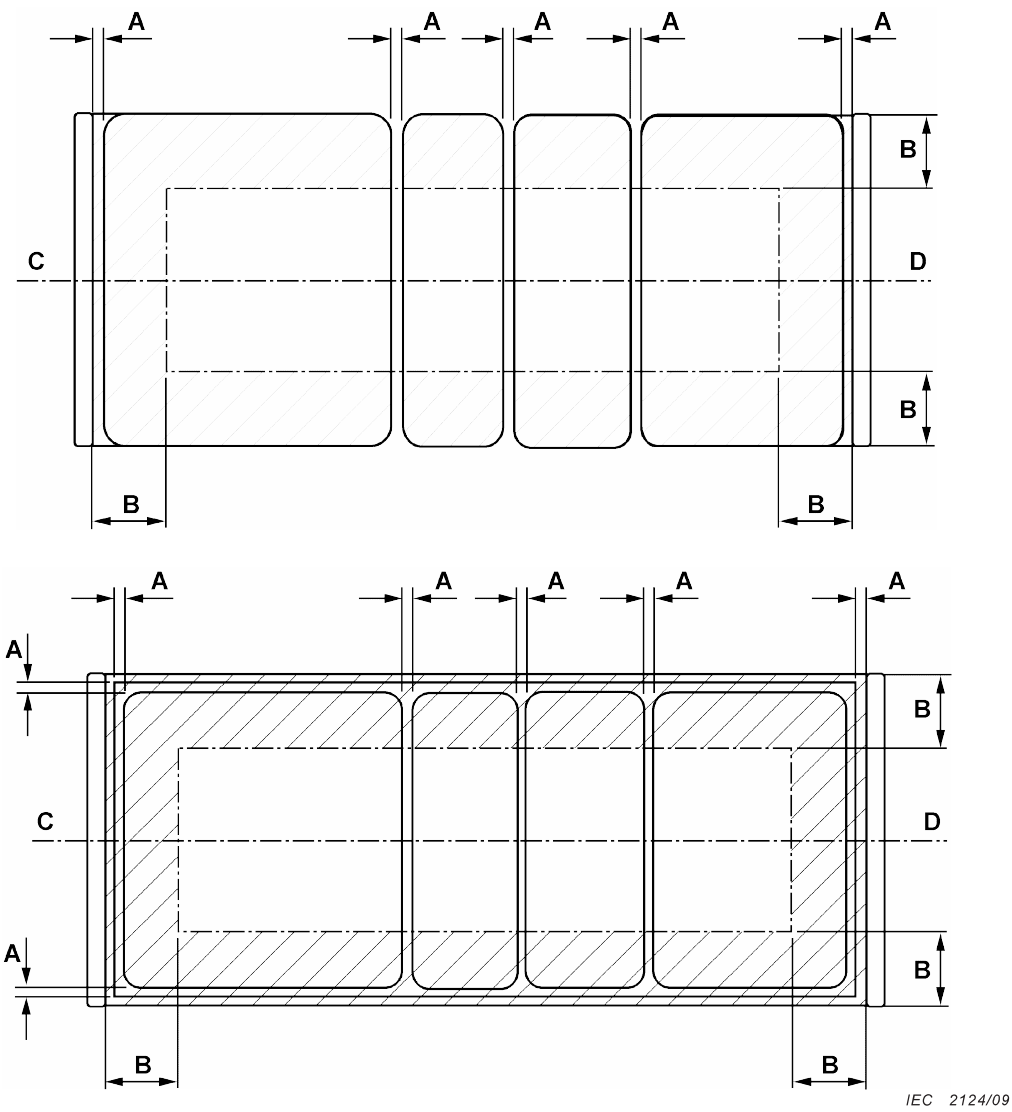

Key

A Spacing between moving parts shall be less than 8 mm (non opening) or more than 25 mm.

B Cross-hatched area representing entrapment reach zone for fingers 200 mm in from the outer edge.

C HEAD BOARD

D FOOT BOARD

Figure 201.109 – Allowable spacing for fingers in areas of normal reach around the perimeter of the MATTRESS SUPPORT PLATFORM

Copyright British Standards Institution
Provided by IHS under license with BSI - Uncontrolled Copy
No reproduction or networking permitted without license from IHS
Licensee=Hill Rom Inc/0078415001, User=Laloge, Dennis
Not for Resale, 10/29/2015 08:09:16 MDT

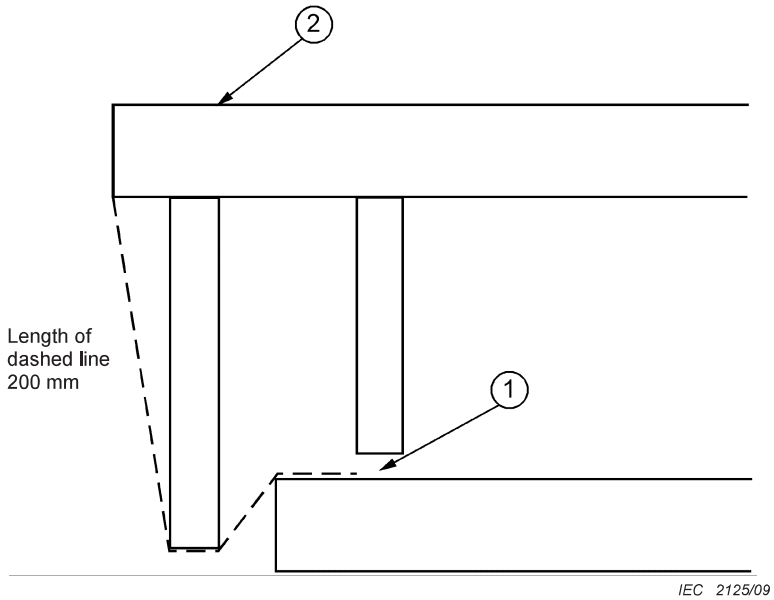

Key

1 Pinch point (TRAPPING ZONE)

2 MATTRESS SUPPORT PLATFORM

Figure 201.110 – Example using barriers for clearance measurement around the perimeter of the MATTRESS SUPPORT PLATFORM to mitigate PATIENT-finger entrapment

The locations identified in Figures 201.111 a) and 201.111 b) shall be considered as TRAPPING ZONES for feet.

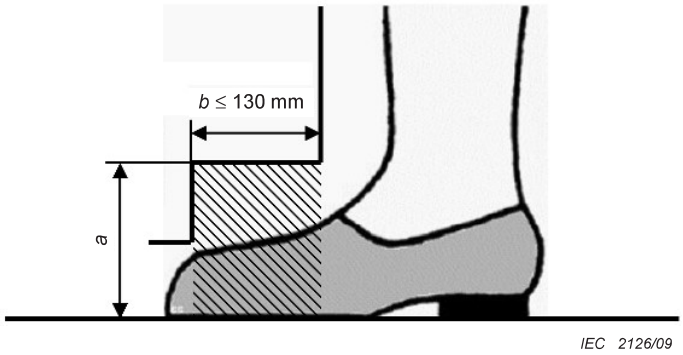

Key

For area where $b \leq 130$ mm;

shall always be $a \geq 120$ mm

NOTE The dimension "*a*" is only measured from the floor. The dimension "*b*" is measured from the outer edge of the MEDICAL BED. Including any permanently fixed ACCESSORIES (e.g. SIDE RAIL), if applicable.

Figure 201.111 a) – Foot and toe clearance area between moving parts and the floor

Copyright British Standards Institution
Provided by IHS under license with BSI - Uncontrolled Copy
No reproduction or networking permitted without license from IHS
Licensee=Hill Rom Inc/0078415001, User=Laloge, Dennis
Not for Resale, 10/29/2015 08:09:16 MDT

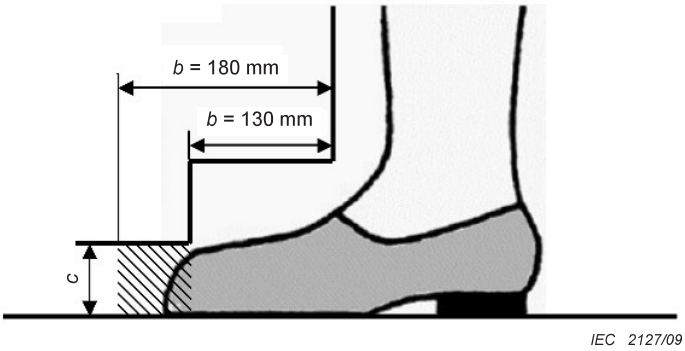

Key

For area where *b* is between 130 mm to 180 mm;

shall always be $c \geq 50$ mm.

NOTE The dimension "*c*" is only measured from the floor. The dimension "*b*" is measured from the outer edge of the MEDICAL BED. Including any permanently fixed ACCESSORIES (e.g. SIDE RAIL), if applicable.

Figure 201.111 b) – Toe clearance area between moving parts and the floor

Figure 201.111 – Clearance areas

Measurements shall be done in the most disadvantageous condition for Figures 201.109, 201.110, 201.111a) and Figure 201.111b).

201.9.2.2.3 Safe distances

Addition:

For the reach of a hand the safe distance is 200 mm (see Figure 201.109 and Figure 201.110).

201.9.2.2.5 Continuous activation

Replacement of item b):

b) all movement of the MEDICAL BED or its parts is possible only by the activation of control device(s) which initiate and maintain operation of the MEDICAL BED elements only as long as the manual control is actuated and where the manual control automatically returns to the 'Stop' or 'Off' position when released.

NOTE Manually and foot-operated movements are considered to comply with this clause, as long as mass and velocity allow adequate control of positioning without causing an unacceptable RISK.

Compliance is checked by inspection and functional tests.

201.9.2.3.1 * Unintended movement

Addition:

Except for emergency MEDICAL BED movements specified by the MANUFACTURER, the means to deactivate MEDICAL BED movement (such as those in PENDANT CONTROL and/or SIDE RAIL function controls intended to be activated to the PATIENT, OPERATOR, or visitor) shall be designed such that it cannot be accidentally re-activated by the PATIENT when the PATIENT is in the MEDICAL BED.

Compliance is checked by inspection.

Copyright British Standards Institution
Provided by IHS under license with BSI - Uncontrolled Copy
No reproduction or networking permitted without license from IHS
Licensee=Hill Rom Inc/0078415001, User=Laloge, Dennis
Not for Resale, 10/29/2015 08:09:16 MDT

Foot operated controls shall be designed to prevent accidental activation.

If the MEDICAL BED design cannot exclude trapping or crushing there shall be a means to deactivate any foot-operated controls used for any MEDICAL BED movement which is not manually operated. The control shall deactivate without OPERATOR action after use. Consideration shall be given to unintended activation by the PATIENT or other persons crawling under the MEDICAL BED or by objects used in close proximity.

If means for the foot-operated MEDICAL BED movement are provided, the means to deactivate foot-operated MEDICAL BED movement shall be located or designed such that a PATIENT cannot accidentally re-activate the functions, taking into account PATIENT mobility and medical supervision.

Compliance is checked by inspection.

201.9.4.2 Instability – overbalance

201.9.4.2.2 * Instability excluding transport

Addition:

When the following tests are performed, the MEDICAL BED shall not overbalance (tip over) with the height and length of the MATTRESS SUPPORT PLATFORM, castors, SIDE RAILS and other ACCESSORIES with their SAFE WORKING LOAD in their most adverse position of NORMAL USE, and the MEDICAL BED equipped with the lightest mattress as specified by the MANUFACTURER or a load representing the weight of the specified mattress that is centered on the MATTRESS SUPPORT PLATFORM.

Compliance is checked by the following tests conducted with the MATTRESS SUPPORT PLATFORM in the flat and horizontal position.

- *Lateral stability test:*

A load of 2 200 N is placed at the side edge of the MATTRESS SUPPORT PLATFORM and evenly distributed over an area 250 mm × 950 mm (see Figure 201.112).

If the maximum PATIENT load according to the MANUFACTURER exceeds 2 200 N, the maximum PATIENT load is to be used and is evenly distributed over an area 950 mm long and 250 mm wide (see Figure 201.112).

Perform the test at each corner of the MEDICAL BED.

- *Longitudinal stability test:*

aa) *If the FOOT BOARDS are removable without the use of TOOLS:*

Remove the FOOT BOARD; a load of 2 200 N for APPLICATION ENVIRONMENTS 1, 2, 3 and 5 and 1 850 N for APPLICATION ENVIRONMENT 4 is evenly distributed over an area of 250 mm across the full width of the MEDICAL BED (see Figure 201.113).

If the maximum PATIENT load according to the MANUFACTURER exceeds 2 200 N (or 1 850 N for APPLICATION ENVIRONMENT 4), the maximum PATIENT load is to be used.

bb) *If the HEAD/FOOT BOARDS are permanently fixed or require the use of TOOLS to remove them:*

Two loads each of 1 100 N for APPLICATION ENVIRONMENTS 1, 2, 3 and 5 and two loads each of 925 N for APPLICATION ENVIRONMENT 4 are at the same time evenly distributed over an area of 250 mm × 475 mm (Figure 201.114). Perform the test at both ends of the MEDICAL BED.

Copyright British Standards Institution
Provided by IHS under license with BSI - Uncontrolled Copy
No reproduction or networking permitted without license from IHS
Licensee=Hill Rom Inc/0078415001, User=Laloge, Dennis
Not for Resale, 10/29/2015 08:09:16 MDT

Dimensions in millimetres

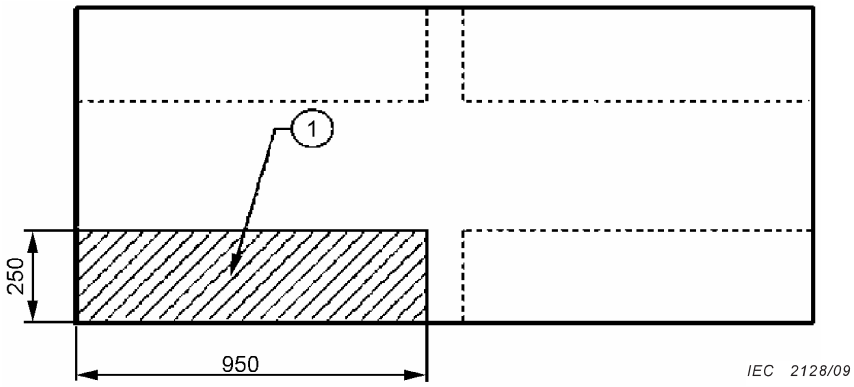

Key

1 Load of 2 200 N evenly distributed or greater if maximum PATIENT load exceeds this.

Figure 201.112 – Lateral stability test along the side of the MEDICAL BED

Dimensions in millimetres

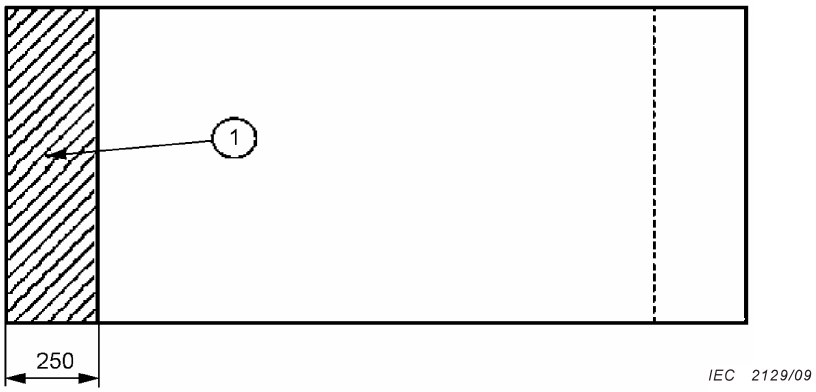

Key

1 Load of 2 200 N, (1 850 N for APPLICATION ENVIRONMENT 4), evenly distributed or greater if maximum PATIENT load exceeds this.

Figure 201.113 – Longitudinal stability test with removable FOOT BOARD

Copyright British Standards Institution
Provided by IHS under license with BSI - Uncontrolled Copy
No reproduction or networking permitted without license from IHS
Licensee=Hill Rom Inc/0078415001, User=Laloge, Dennis
Not for Resale, 10/29/2015 08:09:16 MDT

Dimensions in millimetres

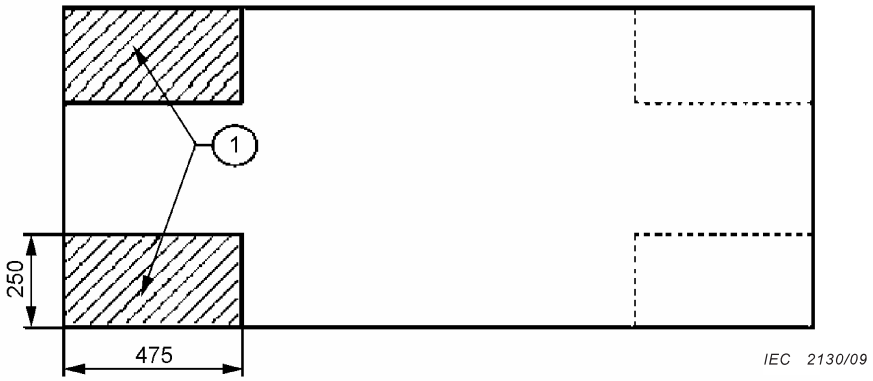

Key

1 Two loads of 1 100 N, (two loads of 925 N for APPLICATION ENVIRONMENT 4), evenly distributed.

Figure 201.114 – Longitudinal stability test with fixed HEAD/FOOT BOARDS

201.9.4.2.3 Instability from horizontal and vertical forces

Replacement of item b):

b) The MEDICAL BED shall not overbalance (tip over) due to sitting or stepping.

NOTE Requirements for PATIENT support surfaces are found in 201.9.8.3.

Compliance is checked by inspection and by the following test:

The MEDICAL BED is placed on a horizontal plane and a constant downward force of 1 100 N is applied at the point of maximum moment to any working surface, excluding the MATTRESS SUPPORT PLATFORM, offering an obvious foothold or sitting surface of a minimum 20 cm by 20 cm area, and at a height not exceeding 1 m from the floor. Prior to the test the MEDICAL BED is prepared as described in 201.9.4.2.2.

201.9.4.2.4.2 Force for propulsion

Addition:

For MEDICAL BEDS intended for PATIENT transport:

– perform the test with the MEDICAL BED with SAFE WORKING LOAD in place.

For MEDICAL BEDS not intended for PATIENT transport:

– perform the test with the MEDICAL BED without SAFE WORKING LOAD in place.

201.9.4.2.4.3 * Movement over a threshold

Replacement:

MOBILE MEDICAL BED intended to transport PATIENTS shall withstand the stresses caused by rough handling. The following threshold test shall be used.

This requirement does not apply to a MEDICAL BED specified by the MANUFACTURER only to be moved within the PATIENT room for cleaning or PATIENT access.

Compliance is checked by the following test:

Copyright British Standards Institution
Provided by IHS under license with BSI - Uncontrolled Copy
No reproduction or networking permitted without license from IHS
Licensee=Hill Rom Inc/0078415001, User=Laloge, Dennis
Not for Resale, 10/29/2015 08:09:16 MDT

The SIDE RAILS are raised and latched, with all other ACCESSORIES intended for NORMAL USE during transport attached to the MEDICAL BED and with the SAFE WORKING LOAD in place and the height in the worst case position.

The MEDICAL BED shall be moved at a speed of 0,8 m/s ± 0,1 m/s, or for motor-driven MEDICAL BEDS for transportation, the maximum speed shall be used, while all castors shall impact and pass over an obstruction which is fixed flat on the floor, with a rectangular cross-section, 20 mm high and 80 mm deep. The MEDICAL BED, with all castors, shall then be pulled back over the obstruction and back to the starting position of the test.

This is repeated 10 times.

Acceptance criteria for MOBILE and motor-driven MEDICAL BED:

At the end of the test, the MEDICAL BED, MEDICAL BEDS parts, ACCESSORIES shall present no loss of function, and without unlocking/unlatching of the SIDE RAILS, or physical deterioration, (e.g., deterioration of fixings, unlocking of ACCESSORIES if fixed on the MEDICAL BED (like SIDE RAILS), which can reduce the NORMAL USE or create a RISK like collapsing, or permanent deformation, modifying gap for entrapment or pinching etc.).

The MEDICAL BED shall go over the obstruction. The MEDICAL BED shall not overbalance (tip over). The MEDICAL BED or MEDICAL BED parts shall not present an unacceptable RISK. Unacceptable RISK is determined by inspection of the MEDICAL BED, its parts, and relevant information from the RISK MANAGEMENT FILE.

201.9.4.3.1 * Instability in transport

Replacement of item c):

c) MOBILE MEDICAL BED shall not result in an unacceptable RISK due to unwanted horizontal movement.

Compliance is checked by the following test:

Prior to the test, the MEDICAL BED is prepared with the following in the most disadvantageous position of NORMAL USE:

- *the height, articulation, and length of the MATTRESS SUPPORT PLATFORM;*
- *castors;*
- *SIDE RAILS;*
- *ACCESSORIES with their SAFE WORKING LOAD in place, including in combination with other accessories (e.g. a platform with its SAFE WORKING LOAD; a lifting pole without its SAFE WORKING LOAD);*
- *mattress (e.g. height and weight) as specified by the MANUFACTURER or a load representing the weight of the specified mattress that is uniformly distributed and centered on the MATTRESS SUPPORT PLATFORM.*

The MOBILE MEDICAL BED is placed with the SAFE WORKING LOAD in place, and the locking device (e.g. brakes) activated, on a plane covered with 2 mm to 4 mm thick vinyl flooring material and inclined at 6° from the horizontal plane on a concrete floor. Following initial elastic movement, initial creepage, and initial pivoting of castors, there shall be no movement of the MOBILE MEDICAL BED greater than 50 mm (in relation to the inclined plane). Any initial movement shall not result in an unacceptable RISK, taking into account the NORMAL USE of the MEDICAL BED.

201.9.4.3.2 Instability excluding transport

Replacement of item a):

Copyright British Standards Institution
Provided by IHS under license with BSI - Uncontrolled Copy
No reproduction or networking permitted without license from IHS
Licensee=Hill Rom Inc/0078415001, User=Laloge, Dennis
Not for Resale, 10/29/2015 08:09:16 MDT

See 201.9.4.3.1.

201.9.4.4 Grips and other handling devices

This subclause does not apply to APPLICATION ENVIRONMENTS 1, 2, 3, 5.

201.9.6.2.1 Audible acoustic energy

Addition:

The results of the measurement shall be given in the instruction for use

Amendment of compliance criteria:

Compliance is checked by measuring the maximum A-weighted sound pressure level at the minimum distances of PATIENT, OPERATOR and other persons from the source of acoustic energy (noise) in NORMAL USE, and if necessary, calculating the A-weighted sound pressure level produced by the ME EQUIPMENT in accordance with ISO 3746. The following conditions apply.

201.9.8 HAZARDS associated with support systems

201.9.8.1 General

Amendment:

Delete the first dashed item.

201.9.8.2 * TENSILE SAFETY FACTOR

This subclause does not apply (see 201.9.8.3.2).

201.9.8.3 Strength of PATIENT or OPERATOR support or suspension systems

201.9.8.3.1 General

Replacement:

MEDICAL BED parts serving for support or immobilization of the PATIENT shall be designed to minimize the RISK of physical injuries and of accidental loosening of fixings.

For APPLICATION ENVIRONMENTS 1 and 2, the SAFE WORKING LOAD of the MEDICAL BED shall be at least 2 000 N. It is considered to be the sum of the following minimum loads:

– 1 350 N, corresponding approximately to a mass of 135 kg for the PATIENT;
– 200 N, corresponding approximately to a mass of 20 kg for the mattress;
– 450 N, corresponding approximately to a mass of 45 kg for both the ACCESSORIES and the mass of the SAFE WORKING LOAD supported by those ACCESSORIES but excluding PATIENT weight.

For APPLICATION ENVIRONMENTS 3, 4 and 5, the SAFE WORKING LOAD of the MEDICAL BED shall be at least 1 700 N. It is considered to be the sum of the following minimum loads:

– 1 350 N, corresponding approximately to a mass of 135 kg for the PATIENT;
– 200 N, corresponding approximately to a mass of 20 kg for the mattress;
– 150 N, corresponding approximately to a mass of 15 kg for both the ACCESSORIES and the mass of the SAFE WORKING LOAD supported by those ACCESSORIES but excluding PATIENT weight.

Copyright British Standards Institution
Provided by IHS under license with BSI - Uncontrolled Copy
No reproduction or networking permitted without license from IHS
Licensee=Hill Rom Inc/0078415001, User=Laloge, Dennis
Not for Resale, 10/29/2015 08:09:16 MDT

The SAFE WORKING LOAD of a BED-LIFT shall be at least 2 200 N. It is considered to be the sum of the following minimum loads:

– 1 350 N, corresponding approximately to a mass of 135 kg for the PATIENT;
– 200 N, corresponding approximately to a mass of 20 kg for the mattress;
– 150 N, corresponding approximately to a mass of 15 kg for both the ACCESSORIES and the mass of the SAFE WORKING LOAD supported by those ACCESSORIES but excluding PATIENT weight;
– 500 N, corresponding approximately to a mass of 50 kg for those parts of the MEDICAL BED intended to be lifted by the BED-LIFT.

If the SAFE WORKING LOAD as specified by the MANUFACTURER is greater than 2 000 N for MEDICAL BEDS for APPLICATION ENVIRONMENTS 1 and 2, 1 700 N for MEDICAL BEDS FOR APPLICATION ENVIRONMENTS 3,4 and 5 or 2 200 N for BED-LIFTS, it shall be used as a basis for testing.

The SAFE WORKING LOAD shall be placed at the worst-case position permitted by the configuration or ACCESSORIES attachment on the support/suspension parts. The SAFE WORKING LOAD is distributed as shown in Figure 201.115.

Copyright British Standards Institution
Provided by IHS under license with BSI - Uncontrolled Copy
No reproduction or networking permitted without license from IHS
Licensee=Hill Rom Inc/0078415001, User=Laloge, Dennis
Not for Resale, 10/29/2015 08:09:16 MDT

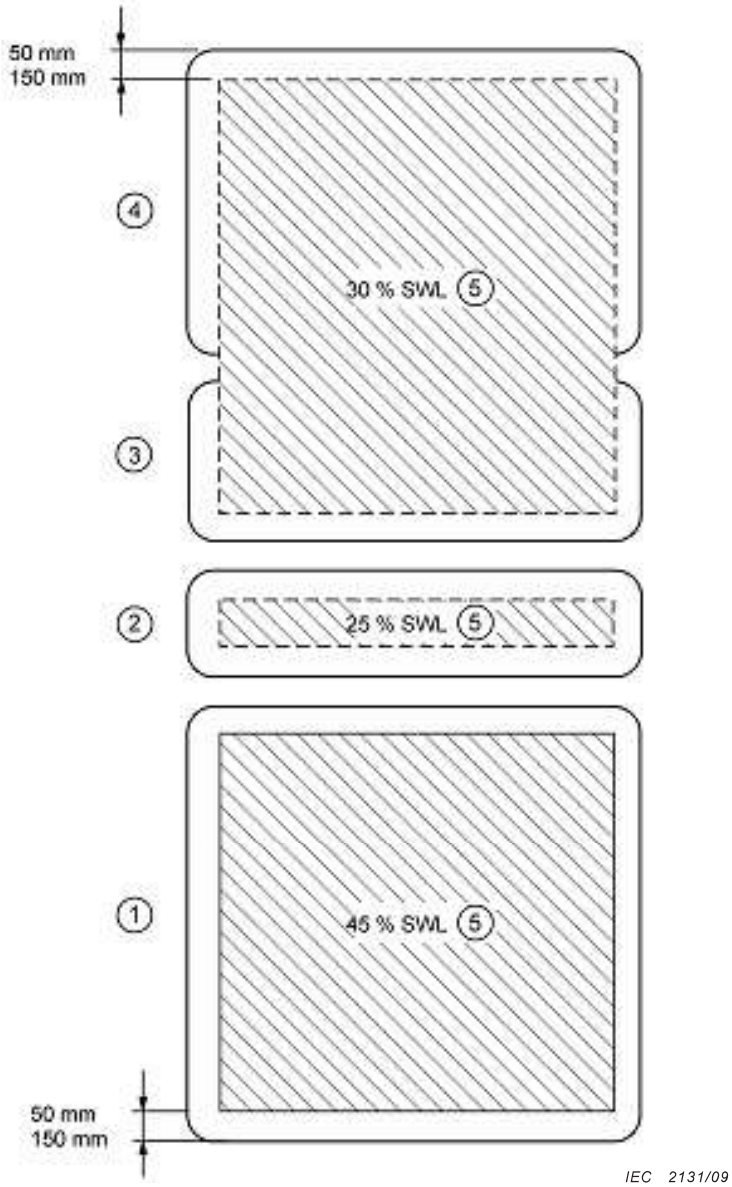

Key

1 Back section

2 Seat section

3 Upper leg section

4 Lower leg section

5 SWL = SAFE WORKING LOAD

Figure 201.115 – Distribution of SAFE WORKING LOAD for tests

For a foot rest, the part of the SAFE WORKING LOAD representing the mass of PATIENTS is distributed over an area of 0,1 m^2 or whatever is available.

NOTE The position of the human body varies depending on the configuration of the support/suspension system and therefore the load acting on different sections will vary and should be taken into account. In analyzing loading forces and torques on support assemblies, the part of the SAFE WORKING LOAD represents the mass as defined.

The SAFE WORKING LOAD of the LIFTING POLE (included PATIENT handle) shall be at least 750 N

Copyright British Standards Institution
Provided by IHS under license with BSI - Uncontrolled Copy
No reproduction or networking permitted without license from IHS
Licensee=Hill Rom Inc/0078415001, User=Laloge, Dennis
Not for Resale, 10/29/2015 08:09:16 MDT

201.9.8.3.2 *Static forces due to loading from persons

Replacement:

The MEDICAL BED and BED-LIFT shall be capable of withstanding a uniformly distributed static load equal to two times the SAFE WORKING LOAD or 4 000 N, whichever is greater, in the most disadvantageous position on the MATTRESS SUPPORT PLATFORM in a horizontal position (see Figure 201.115).

When impairment by wear, corrosion, material fatigue or aging is expected, relevant supporting parts shall have a safety factor not less than 4 times the SAFE WORKING LOAD.

A1 NOTE It might be necessary to support assemblies that are connected to the assembly under test but do not require such a high safety factor, e.g. an assembly under test requires a TENSILE SAFETY FACTOR of 4 and the assembly supporting it is designed with a lower TENSILE SAFETY FACTOR. Use of additional support should be explained in the test report. A1

a) For MEDICAL BEDS:

Compliance is checked by the following test:

Permanent deformation is acceptable only if the MEDICAL BED is in compliance with its intended function. The static load shall be applied for at least 1 min, unless material creep may be an issue, in which case the time shall be increased to at least 1 h.

b) For BED-LIFTS:

Compliance is checked by the following test:

Mount a TEST BED BOARD to a BED-LIFT not supplied with a bed board.

Place the mattress, as specified by the MANUFACTURER, onto the bed board/TEST BED BOARD, in its flat position.

Apply a vertical load of two times the SAFE WORKING LOAD or 4 000 N, whichever is greater (excluding the mass of the mattress placed onto the MEDICAL BED or the mass of the TEST BED BOARD), equally distributed over the mattress.

Permanent deformation is acceptable only if the BED-LIFT is in compliance with its intended function. The static load shall be applied for at least 1 min, unless material creep may be an issue in which case the time shall be increased to at least 1 h.

All ACCESSORIES (including those not supporting PATIENT weight) shall be designed to support a load that is at least two times the SAFE WORKING LOAD specified for the ACCESSORY. This load is applied in the most disadvantageous direction and position on the ACCESSORY.

Compliance is checked by the following test:

With the ACCESSORY (others than LIFTING POLES) in its worst case NORMAL USE position, attach a static load equal to two times its SAFE WORKING LOAD for at least 1 min, unless material creep may be an issue in which case the time shall be increased to at least 1 h.

There shall be no HAZARD or loss of function.

Copyright British Standards Institution
Provided by IHS under license with BSI - Uncontrolled Copy
No reproduction or networking permitted without license from IHS
Licensee=Hill Rom Inc/0078415001, User=Laloge, Dennis
Not for Resale, 10/29/2015 08:09:16 MDT

The fastenings of LIFTING POLES shall still function normally and present no HAZARDS after the following tests. For the LIFTING POLE, permanent deformation is acceptable in the first test but a sudden movement of the LIFTING POLE shall be considered a HAZARD:

1) Compliance is checked by the following test:

Position the LIFTING POLE to the MEDICAL BED in its most adverse position intended for use.

Apply a downward load of two times the SAFE WORKING LOAD of LIFTING POLES (at least 1 500 N) to the outermost suspension point for the handle for at least 1 min, unless material creep may be an issue in which case the time shall be increased to at least 1 h.

Examine the LIFTING POLE and its fastenings during and after application of the load.

2) Compliance is checked by the following test:

Position the LIFTING POLE to the MEDICAL BED in its most adverse position intended for use. Fixate the MEDICAL BED during the test if necessary due to instability.

Apply perpendicular to the MEDICAL BED side a horizontal force of 350 N to the outermost suspension point for the handle. Examine the LIFTING POLE and its fastenings during and after application of the load.

201.9.8.3.3 * Dynamic forces due to loading from persons

Replacement:

201.9.8.3.3.1 General

Where dynamic forces (due to sitting down, standing up, PATIENT handling PROCESS or the like) can be exerted on equipment parts intended to support or suspend a PATIENT in NORMAL USE, they shall not result in an unacceptable RISK.

Durability shall be considered with regards to the most disadvantageous position of the MEDICAL BED parts intended to support or suspend a PATIENT in NORMAL USE.

Compliance is checked by the following tests:

Condition of test:

Place the worst-case mattress specified by MANUFACTURER onto the MEDICAL BED in its flat position. If height-adjustable, adjust the height to the worse case position. Utilize loading pad (Figure 201.104) at position A in Figure 201.116, at whichever side is regarded to be the weaker.

Copyright British Standards Institution
Provided by IHS under license with BSI - Uncontrolled Copy
No reproduction or networking permitted without license from IHS
Licensee=Hill Rom Inc/0078415001, User=Laloge, Dennis
Not for Resale, 10/29/2015 08:09:16 MDT

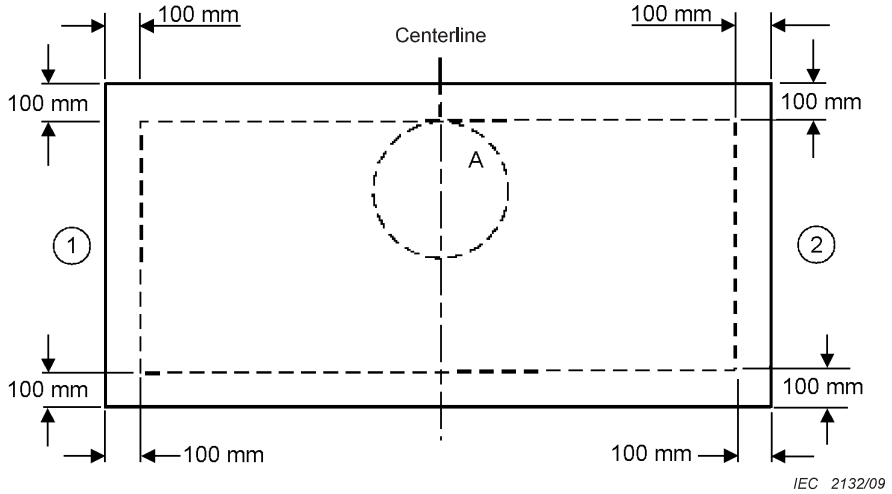

Key

1 Head-end of MEDICAL BED

2 Foot-end of MEDICAL BED

Figure 201.116 – Position of loading pad
(see Figure 201.104)

Test method:

Apply the loading pad (Figure 201.104) 10 000 times at the position A shown in Figure 201.116, with a load of 1 350 N or the maximum PATIENT load, whichever is greater.

Acceptance criteria/Compliance method:

When tested in accordance with the above, the MEDICAL BED shall still function normally and present no HAZARDS after removal of the loading pad.

Remove the mattress and perform the following:

- *evaluate entrapment HAZARDS according to 201.9.1.101;*
- *evaluate TRAPPING ZONES according to 201.9.2.2;*
- *conduct test according to 201.9.8.3.2.*

201.9.8.3.3.2 * Dynamic testing of the height adjustment mechanism

The height adjustment of MEDICAL BED or BED-LIFT shall function normally and present no unacceptable RISK after 3 000 cycles in NORMAL USE.

Compliance is checked by the following test:

Place the MEDICAL BED in its flat position. If the BED-LIFT is separate from a MATTRESS SUPPORT PLATFORM, mount a TEST BED BOARD to the BED-LIFT. Apply the SAFE WORKING LOAD distributed as indicated in 201.9.8.3.1 (Figure 201.115) on the MATTRESS SUPPORT PLATFORM. For BED-LIFTS apply the SAFE WORKING LOAD minus the weight of the TEST BED BOARD distributed as indicated in 201.9.8.3.1 (Figure 201.115) on the MATTRESS SUPPORT PLATFORM.

Copyright British Standards Institution
Provided by IHS under license with BSI - Uncontrolled Copy
No reproduction or networking permitted without license from IHS
Licensee=Hill Rom Inc/0078415001, User=Laloge, Dennis
Not for Resale, 10/29/2015 08:09:16 MDT

The MEDICAL BED, or BED-LIFT is raised and lowered completely 3 000 times in accordance with the procedure stated in the instructions for use. After the test remove the SAFE WORKING LOAD.

201.9.8.3.3.3 * SIDE RAIL strength and latch reliability

SIDE RAIL latches/locks shall remain secure when subjected to the forces of NORMAL USE.

Compliance is checked by the following test. Forces are applied at the worst-case accessible location for latching/locking:

Cycle the SIDE RAIL mechanism (from the latched, upper position, to the unlatched, lowered position, and back to the latched, upper position) for 30 000 cycles. A force A or B or C or D or E or F (as specified in Figure 201.117) shall then be applied to the worst-case position for locking/latching of the SIDE RAIL in the direction of unlatching/unlocking. The SIDE RAIL shall not become unlatched/unlocked or create any other unacceptable RISK.

SIDE RAILS shall be designed to withstand the forces applied during reasonably foreseeable misuse over the product life cycle without creating an unacceptable RISK.

Compliance is checked by the following test with the SIDE RAIL in upper position:

a) Lateral force cycling test. Exert a force of 100 N that is perpendicular to the SIDE RAIL at the top middle section of the SIDE RAIL in the direction indicated by E or F in Figure 201.117. Reverse direction. Repeat for 3 000 cycles.

b) Longitudinal force cycling test. Exert a force of 100 N on the SIDE RAIL in the lengthwise direction of the SIDE RAIL as indicated by C or D in Figure 201.117. Reverse direction. Repeat for 3 000 cycles.

c) Vertical force cycling test. Exert a force of 100 N on the uppermost part of the SIDE RAIL in the vertical direction of the SIDE RAIL as indicated by B in Figure 201.117. Repeat for 3 000 cycles. No test is required in direction A.

d) Upon completion of a), b) and c) above, apply a static load in the directions of Figure 201.117 in worst case positions. The SIDE RAIL shall not become unlatched/unlocked or create any other unacceptable RISK.

NOTE The MANUFACTURER shall take into account when these forces can be applied in the lowered position.

Copyright British Standards Institution
Provided by IHS under license with BSI - Uncontrolled Copy
No reproduction or networking permitted without license from IHS

Licensee=Hill Rom Inc/0078415001, User=Laloge, Dennis
Not for Resale, 10/29/2015 08:09:16 MDT

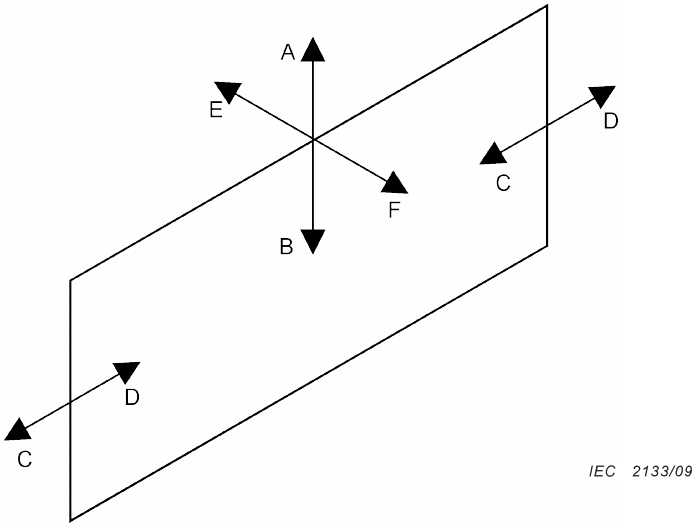

Direction of force	Force
A	500 N
B	750 N
C	500 N
D	500 N
E	500 N
F	500 N

Figure 201.117 – Application of forces for test of SIDE RAIL

201.9.8.3.3.4 Dynamic testing of the LIFTING POLE

The LIFTING POLE and its fastenings shall still function normally and present no HAZARDS after the following test. A sudden movement of the LIFTING POLE or its handle shall be considered a HAZARD.

Compliance is checked by the following test:

Position the LIFTING POLE to the MEDICAL BED in its most adverse position intended for use.

Apply a vertical downward load of the SAFE WORKING LOAD to the LIFTING POLE (at least 750 N) 1 000 times onto the handle of the LIFTING POLE. Examine the LIFTING POLE and its fastenings during and after application of the force and record deflection and deformation.

The deflection of the LIFTING POLE shall not be greater than 100 mm during application of the SAFE WORKING LOAD and the permanent deformation not more than 20 mm after the durability test measured in relation to the MATTRESS SUPPORT PLATFORM.

201.9.8.4 Systems with MECHANICAL PROTECTIVE DEVICES

201.9.8.4.1 General

This subclause does not apply.

Copyright British Standards Institution
Provided by IHS under license with BSI - Uncontrolled Copy
No reproduction or networking permitted without license from IHS
Licensee=Hill Rom Inc/0078415001, User=Laloge, Dennis
Not for Resale, 10/29/2015 08:09:16 MDT

201.9.8.5 Systems without MECHANICAL PROTECTIVE DEVICES

This subclause does not apply.

Additional subclause:

201.9.101 *Protection against inadvertent PATIENT falls

SIDE RAILS shall be designed with minimum height requirements as indicated by G in Figure 201.118 and Table 201.102.

Where a SPECIALTY MATTRESS or MATTRESS OVERLAY is used and the SIDE RAIL does not meet G as indicated in Table 201.102, a RISK ASSESSMENT shall be performed to assure equivalent safety.

Compliance is checked by measurement of G and inspection of the RISK MANAGEMENT FILE.

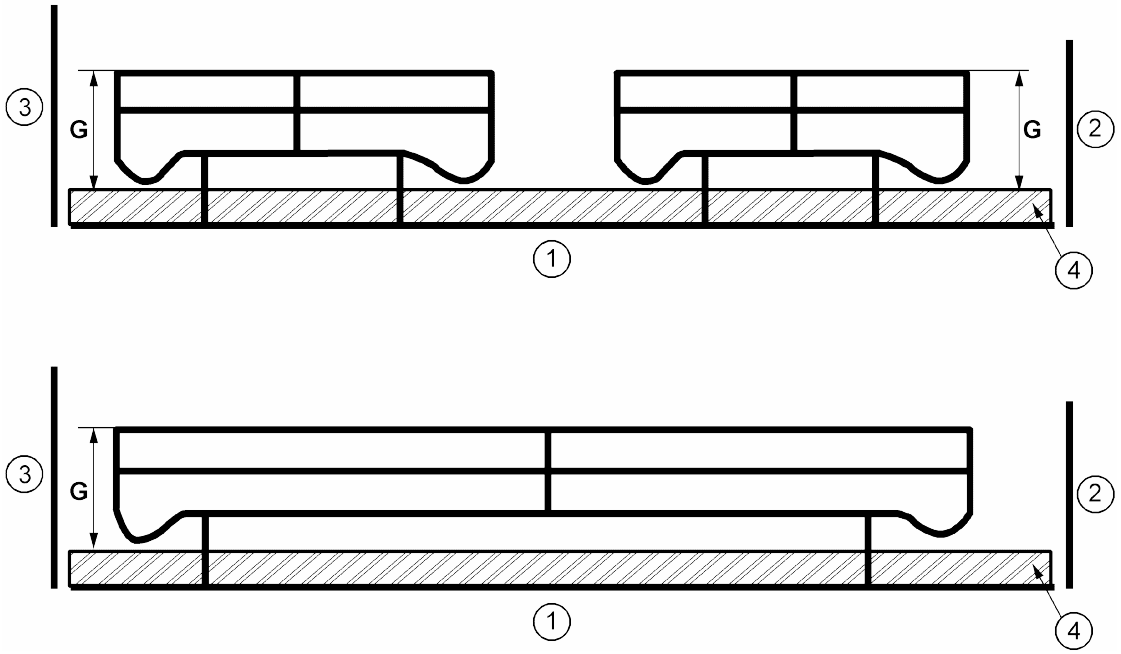

IEC 2134/09

Key

1 MATTRESS SUPPORT PLATFORM

2 FOOT BOARD

3 HEAD BOARD

4 Mattress

G Height of the top edge of the SIDE RAIL above the mattress

Figure 201.118 – Height of SIDE RAIL

Copyright British Standards Institution
Provided by IHS under license with BSI - Uncontrolled Copy
No reproduction or networking permitted without license from IHS
Licensee=Hill Rom Inc/0078415001, User=Laloge, Dennis
Not for Resale, 10/29/2015 08:09:16 MDT

Table 201.102 – Protection against inadvertent PATIENT falls

Designator	Description	Requirement/Compliance method
G	Height of the top edge of the SIDE RAIL above the mattress without compression in at least 50 % of the length of the MATTRESS SUPPORT PLATFORM. Other raised and locked positions not meeting the height of ≥ 220 mm or length at least 50% for SIDE RAILS and specified for purposes other than SIDE RAIL application (e.g. mobilization bar or grab handles) shall be covered in the MANUFACTURER'S RISK MANAGEMENT FILE. When SIDE RAILS cover less than the full length of the MATTRESS SUPPORT PLATFORM, those parts that are above 220 mm shall be placed strategically to help prevent accidental falls from the MEDICAL BED. All Dimensions *C* of Table 201.101 shall be respected. NOTE Placement of the 220 mm portions of the rail may need to be placed next to those parts of the body that are highest (e.g. shoulder for a PATIENT lying on their side) and the parts which could lead to slipping out of the MEDICAL BED (legs) in order to prevent accidental rollout or sliding out. See Figure 201.116, for guidance on distribution of body mass.	≥ 220 mm *Compliance is checked by measurement*

201.10 Protection against unwanted and excessive radiation HAZARDS

Clause 10 of the general standard applies.

201.11 Protection against excessive temperatures and other HAZARDS

Clause 11 of the general standard applies, except as follows:

201.11.1.1 Maximum temperature during NORMAL USE

Amendment:

Replacement of Table 24:

--`,`,`,`,`,`,`,`,`,`,`,`,`,`,`,`,`,`,`,`,`,`---

Copyright British Standards Institution
Provided by IHS under license with BSI - Uncontrolled Copy
No reproduction or networking permitted without license from IHS
Licensee=Hill Rom Inc/0078415001, User=Laloge, Dennis
Not for Resale, 10/29/2015 08:09:16 MDT

Table 24 – Allowable maximum temperatures for skin contact with MEDICAL BED APPLIED PARTS

APPLIED PARTS of MEDICAL BEDS		Maximum temperature [a b] °C		
		Metal and liquids	Glass, porcelain, vitreous material	Moulded material, plastic, rubber, wood
APPLIED PART having contact with the PATIENT for a time "*t*"	*t* < 1 min	51	56	60
	1 min ≤ *t* < 10 min	48	48	48
	10 min ≤ *t*	41	41	41

[a] These temperature limit values are applicable for the healthy skin of adults, but in the limitation for temperature for duration more than 10 min also DISABLED PERSONS with sensible skin or no sensation have been considered. They are not applicable when large areas of the skin (10 % of total body surface or more) can be in contact with a hot surface. They are not applicable in the case of skin contact with over 10 % of the head surface. Where this is the case, appropriate limits shall be determined and documented in the RISK MANAGEMENT FILE.

[b] Where it is necessary for APPLIED PARTS to exceed the temperature limits of Table 201.103 in order to provide clinical benefit, the RISK MANAGEMENT FILE shall contain documentation showing that the resulting benefit exceeds any associated increase in RISK.

201.11.6.5 Ingress of water or particulate matter into ME EQUIPMENT and ME SYSTEMS

Addition:

201.11.6.5.101 Ingress of water

ENCLOSURES of MEDICAL BED shall provide a minimum protection degree of IPX4 in accordance with the classification of IEC 60529.

Compliance is checked by the tests of IEC 60529 with the MEDICAL BED placed in the least favourable position of NORMAL USE (as defined in the instructions for use) and by inspection:

All parts that can be removed without a TOOL shall be removed (detached/opened) before the test. The test shall be executed without a mattress. After these procedures, the MEDICAL BED shall show no signs of bridging of insulation (or electrical components) that could result in a HAZARD in NORMAL CONDITION or in combination with a SINGLE FAULT CONDITION (based on a visual inspection) followed by the appropriate dielectric strength and LEAKAGE CURRENT tests.

The MEDICAL BED shall comply with its INTENDED USE.

201.11.6.6 Cleaning and disinfection of ME EQUIPMENT and ME SYSTEMS

Addition:

If the MEDICAL BED is intended for use with equipment for cleaning and disinfection, the MANUFACTURER shall specify the cleaning and/or disinfection PROCESS.

201.11.6.6.101 Machine washable MEDICAL BED

MEDICAL BED or BED-LIFT specified by the MANUFACTURER to be machine washable by an automatic washing system shall function normally after the test.

Variations to the test procedure regarding test-cycle, temperature, time and cleaning fluids shall be covered in the RISK MANAGEMENT FILE of the MANUFACTURER.

Copyright British Standards Institution
Provided by IHS under license with BSI - Uncontrolled Copy
No reproduction or networking permitted without license from IHS
Licensee=Hill Rom Inc/0078415001, User=Laloge, Dennis
Not for Resale, 10/29/2015 08:09:16 MDT

The present test method represents a basic procedure for disinfection of a MEDICAL BED in a washing machine.

Compliance is checked by the following test:

a) *Parts and access covers which can be detached/opened without the use of a TOOL shall be detached/opened;*
   - *temperature preconditioning treatment of 10 days at 65 °C ± 2 °C or at maximum value of the rated storage temperature, if higher, is carried out;*
   - *the MEDICAL BED shall then be kept at room temperature for not less than 16 h;*

b) *50 test cycles according to the procedure the MANUFACTURER described in the instructions for use or consisting of:*
   - *2 min wash with 70 °C water at a ph-value 5-8, 0,5 % cleaning and disinfectant solution as specified by the MANUFACTURER;*
   - *20 s rinse with 85 °C water at a ph-value 5-8, and 0,2 % clear rinsing solution according to the data of the MANUFACTURER.*
   - *10 min cooling at 20° C ambient temperature.*
   - *Acceptance criteria:*
     1) *Immediately after the test cycles, the MEDICAL BED is connected to mains. No unintentional movements shall arise.*
     2) *The MEDICAL BED shall function as specified by the INTENDED USE at the following intervals:*
        - *immediately after the test cycles;*
        - *5 min (± 1 min) after the test cycles;*
        - *60 min (± 5 min) after the test cycles;*
        - *24 h (± 30 min) after the test cycles;*
     3) *Perform dielectric strength and LEAKAGE CURRENT tests according to 8.8.3 and 8.7 at the following intervals:*
        - *immediately after the test cycles*
        - *24 h (± 30 min) after the test cycles*
     4) *Perform a visual inspection for ingress of water that may result in an unacceptable RISK (i.e., shorting of isolation barriers and violation of creepage distances).*

NOTE For some MEDICAL BED not all acceptance criteria apply (i.e. for manual MEDICAL BEDS, electrical acceptance criteria would not apply).

201.11.8 * Interruption of the power supply/SUPPLY MAINS to ME EQUIPMENT

Addition:

In an emergency situation when MAINS VOLTAGE has been interrupted, ESSENTIAL PERFORMANCE functions defined by the MANUFACTURER shall be able to be operated by other means and back section lowering or any other emergency position (specified by the MANUFACTURER) shall be achievable within 30 s.

Compliance is checked by functional test in the most adverse conditions.

201.12 Accuracy of controls and instruments and protection against hazardous outputs

Clause 12 of the general standard applies, except as follows:

Copyright British Standards Institution
Provided by IHS under license with BSI - Uncontrolled Copy
No reproduction or networking permitted without license from IHS
Licensee=Hill Rom Inc/0078415001, User=Laloge, Dennis
Not for Resale, 10/29/2015 08:09:16 MDT

201.12.2 USABILITY

Addition:

USABILITY analysis shall take into account MEDICAL BED design aspects such as the MATTRESS SUPPORT PLATFORM height, with regard to both OPERATOR and PATIENT, as relevant to the APPLICATION ENVIRONMENT.

NOTE Access to PATIENT for the purposes of medical treatment should not be delayed significantly by the SIDE RAILS and their respective control systems.

201.13 HAZARDOUS SITUATIONS and fault conditions

Clause 13 of the general standard applies, except as follows:

201.13.1.4 * Specific MECHANICAL HAZARDS

Addition:

Protection shall be provided in the motion controls of electrical MEDICAL BEDS such that a SINGLE FAULT CONDITION does not cause a movement without human intervention.

NOTE A MOTION LOCKOUT CONTROL may be used as a means of compliance. A MOTION LOCKOUT CONTROL may be activated automatically or as an OPERATOR option. (See also 201.7.4.2.).

If an auxiliary subsystem that deactivates motion controls (MOTION LOCKOUT CONTROL) is provided, it shall remain functional under SINGLE FAULT CONDITION.

For switches and other components that control motion in electrical MEDICAL BEDS, COMPONENTS WITH HIGH-INTEGRITY CHARACTERISTICS are required if their failure can cause a HAZARD.

Hydraulic, pneumatic, and mechanical subsystems of MEDICAL BEDS shall not cause unintended movement of the MATTRESS SUPPORT PLATFORM in SINGLE FAULT CONDITION, where such movement could cause a HAZARD.

Protection of SINGLE FAULT CONDITION for pneumatic, hydraulic, or mechanical MEDICAL BEDS, or for pneumatic, hydraulic, or mechanical subsystems of electrical MEDICAL BEDS, shall be met by compliance with 9.7.2 of the general standard, and other applicable clauses of the general standard and this standard pertaining to safety factors.

201.13.2.2 Electrical SINGLE FAULT CONDITION

Addition:

201.13.2.2.101 Power-driven MEDICAL BED for transportation

Power-driven MEDICAL BEDS for transportation shall have a means to allow transport by the OPERATOR under SINGLE FAULT CONDITION of the transport system.

NOTE A power-driven medical bed incorporates a propulsion system.

201.14 PROGRAMMABLE ELECTRICAL MEDICAL SYSTEMS (PEMS)

Clause 14 of the general standard applies.

Copyright British Standards Institution
Provided by IHS under license with BSI - Uncontrolled Copy
No reproduction or networking permitted without license from IHS
Licensee=Hill Rom Inc/0078415001, User=Laloge, Dennis
Not for Resale, 10/29/2015 08:09:16 MDT

201.15 Construction of ME EQUIPMENT

Clause 15 of the general standard applies, except as follows:

201.15.3 Mechanical strength

201.15.3.4.1 HAND-HELD ME EQUIPMENT

Replacement:

PENDANT CONTROL shall not result in an unacceptable RISK as a result of a free fall.

Compliance is checked by the following test:

The PENDANT CONTROL has to fall 1 000 times as specified in IEC 60068-2-31:2008.

After the test the PENDANT CONTROL is checked by inspection, functional test and relevant electrical safety tests.

201.15.3.5 * Rough handling test

Replacement of item c):

c) Door frame shock

The MEDICAL BED is moved three times in its normal direction of travel at a speed of 0,4 m/s ± 0,1 m/s with the MATTRESS SUPPORT PLATFORM in the worst case position, unless transport position is specified by the MANUFACTURER, against a hardwood vertical obstacle having a width and thickness of 40 mm affixed to a vertical rigid support (e.g. concrete). The height of the vertical obstacle shall be at the same level as the MEDICAL BED contact point(s). The direction of movement is perpendicular to the face of the obstacle.

Addition at the end of the paragraph:

This requirement does not apply to MEDICAL BED specified by the MANUFACTURER only to be moved within the PATIENT room for cleaning or PATIENT access.

201.15.4 ME EQUIPMENT components and general assembly

201.15.4.4 * Indicators

Amendment:

Delete the first two paragraphs.

201.15.4.6.2 * Limitation of movement

Addition:

The angle (designated "γ" in Figure 201.119) between the back section and leg/upper leg section for various configurations of the MATTRESS SUPPORT PLATFORM shall always be greater than 90° under NORMAL CONDITIONS.

In APPLICATION ENVIRONMENT 4, the angle α of the back section in relation to the horizontal shall always be greater than or equal to 0°.

Copyright British Standards Institution
Provided by IHS under license with BSI - Uncontrolled Copy
No reproduction or networking permitted without license from IHS
Licensee=Hill Rom Inc/0078415001, User=Laloge, Dennis
Not for Resale, 10/29/2015 08:09:16 MDT

If a MEDICAL BED in APPLICATION ENVIRONMENTS 1, 2, 3 or 5 is provided with Trendelenburg-position, the entire MATTRESS SUPPORT PLATFORM shall be able to achieve a minimum of 12° so that the PATIENT'S head is lower than the circulatory centre point of the body.

Compliance is checked by operating the controls to achieve the maximum angle γ and then measuring this angle.

AC1

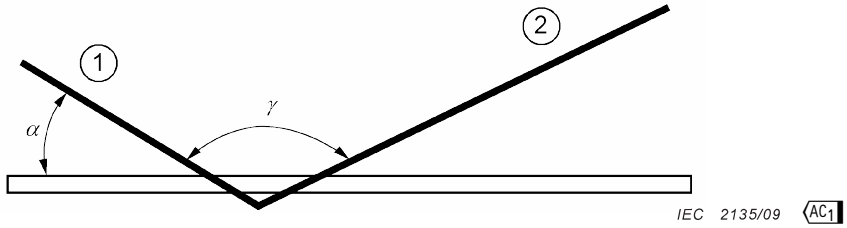

Figure 201.119a – Angle γ between the back section and the leg section of the MATTRESS SUPPORT PLATFORM

AC1

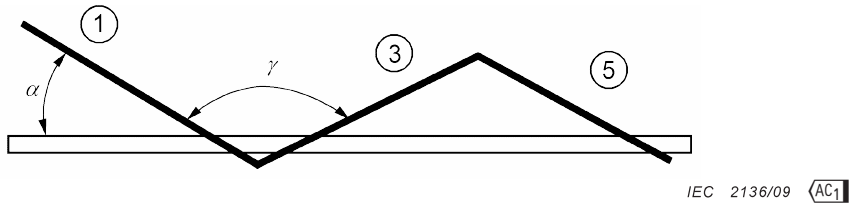

Figure 201.119b – Angle γ between the back section and the upper leg section of the MATTRESS SUPPORT PLATFORM

AC1

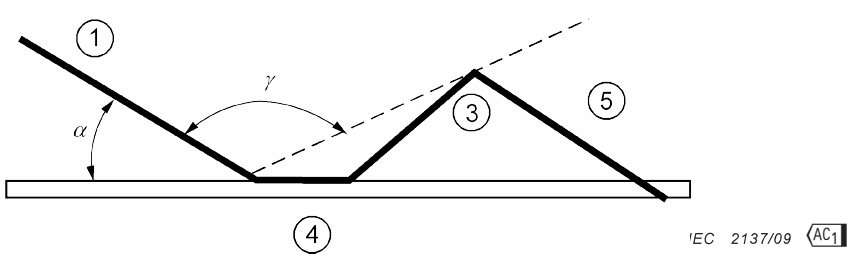

Figure 201.119c – Angle γ between the angled back section and upper leg section of the MATTRESS SUPPORT PLATFORM

Copyright British Standards Institution
Provided by IHS under license with BSI - Uncontrolled Copy
No reproduction or networking permitted without license from IHS
Licensee=Hill Rom Inc/0078415001, User=Laloge, Dennis
Not for Resale, 10/29/2015 08:09:16 MDT

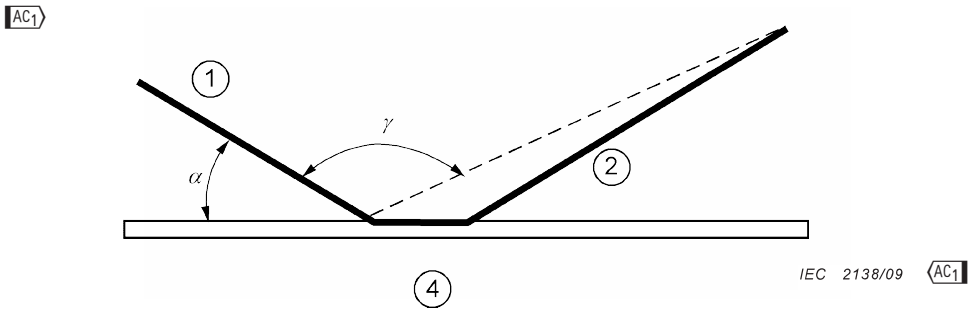

Key

1 Back section

2 Leg section

3 Upper leg section

4 Seat section

5 Lower leg section

Figure 201.119d – Angle γ between the angled back section and the leg/upper leg section of the MATTRESS SUPPORT PLATFORM

Figure 201.119 – Configurations of the MATTRESS SUPPORT PLATFORM

201.15.4.7.1 Mechanical strength

Amendment to item b):

This requirement does not apply if the foot-operated control device is so located that the operator's entire weight cannot be placed on it.

Compliance is checked by application to the foot-operated control device, in its position of NORMAL USE, of an actuating force of 1 350 N for 1 min. The force is applied over an area of 30 mm diameter. There shall be no damage to the device resulting in an unacceptable RISK.

Addition to item b):

Where the entire weight cannot be placed on the foot-operated control device, the RISK MANAGEMENT FILE shall specify the compliance criteria.

Compliance is checked by inspection of the RISK MANAGEMENT FILE.

201.15.4.7.3 Entry of liquids

Amendment:

Foot-operated controls shall be at least IPX4.

Additional subclauses:

201.15.4.101 HEAD/FOOT BOARD assembly

The design of the MEDICAL BED shall allow immediate and unimpeded access to the PATIENT from the head end of the MEDICAL BED in emergency situations. This applies for APPLICATION ENVIRONMENTS 1 and 2 only.

Copyright British Standards Institution
Provided by IHS under license with BSI - Uncontrolled Copy
No reproduction or networking permitted without license from IHS
Licensee=Hill Rom Inc/0078415001, User=Laloge, Dennis
Not for Resale, 10/29/2015 08:09:16 MDT

NOTE One means of accomplishing this is by a HEAD BOARD, which is removable without the use of a TOOL by one person.

Compliance is checked by the following test:

A trained OPERATOR shall be able to remove the HEAD BOARD within 15 s.

201.15.4.102 Mattress retention

The MEDICAL BED shall be designed to retain the mattress in position during NORMAL USE to prevent sliding off MATTRESS SUPPORT PLATFORM. A RISK ASSESSMENT shall be performed to evaluate the maximum movement of the retained mattress according to Area "D" of Table 201.101.

Compliance is checked by inspection of the RISK MANAGEMENT FILE.

201.16 ME SYSTEMS

Clause 16 of the general standard applies.

201.17 Electromagnetic compatibility of ME EQUIPMENT and ME SYSTEMS

Clause 17 of the general standard applies.

Annexes

The annexes of the general standard apply.

--`,,`,,`,`,`,,`,`,,`,`,,`,`,,`,`,,`,`,,`,`,,`,`,,`,`,,`,`,,`---

Copyright British Standards Institution
Provided by IHS under license with BSI - Uncontrolled Copy
No reproduction or networking permitted without license from IHS

Licensee=Hill Rom Inc/0078415001, User=Laloge, Dennis
Not for Resale, 10/29/2015 08:09:16 MDT

Annex AA
(informative)

Particular guidance and rationale

AA.1 General guidance

In 1996, the IEC published the first edition of the particular standard for electrically operated hospital beds, IEC 60601-2-38. The publication was in response to the demand in the field for a universal standard addressing HAZARDS specific to the safety of the hospital bed. Used in conjunction with a MANUFACTURER'S RISK ASSESSMENT, the standard was felt to be the current thinking on establishing a BASIC SAFETY benchmark for industry.

An amendment of IEC 60601-2-38 issued in 1999 recognized the need to mitigate against a RISK of PATIENT entrapment in the SIDE RAILS, again combined with the use of the MANUFACTURER'S RISK ASSESSMENT. Although this improved the particular standard, it still was centered upon electrically operated hospital beds, and failed to take into account manually operated hospital beds and products in other medical environments.

In 2000, the EN 1970 standard (Adjustable beds for DISABLED PERSONS – Requirements and test methods) was published, which addressed beds used by DISABLED PERSONS to alleviate or compensate for a disability or handicap. This standard offered a broadened scope in conjunction with IEC 60601-2-38, but after the edition of Amendment 1 to IEC 60601-2-38, the opportunity presented itself to combine the two standards to a common, international standard.

As work began on the integration, the IEC adjusted its stance on BASIC SAFETY and ESSENTIAL PERFORMANCE, integrating them into the third edition of IEC 60601-1. It therefore became necessary to align the new standard with the third edition. The particular standard was given a new number, IEC 60601-2-52, and work began on alignment to third edition.

This particular standard, therefore, is the realization of much work in alignment, and scope adjustment between IEC 60601-2-38, EN 1970, and the third edition of IEC 60601-1. It represents the current thinking in BASIC SAFETY and ESSENTIAL PERFORMANCE of the MEDICAL BED as used to alleviate illness of PATIENTS and disability of DISABLED PERSONS. This is the effort of a joint working group of the IEC and the ISO.

AA.2 Rationale for particular clauses and subclauses

The following are rationales for specific clauses and subclauses in this particular standard, with clause and subclause numbers parallel to those in the body of the document.

Subclause 201.1.1 – Scope

The working group recognizes that the definitions of the terms “adult” and “child” are based on physical characteristics, which vary from one country to another. If the highest level of safety is to be achieved for PATIENTS and OPERATORS, it is necessary to rely on caregivers to use their professional judgement to differentiate the needs of children from those of adults in relation to the ME EQUIPMENT, taking into consideration not only the physical, psychological and medical needs of the individual, but also the PATIENT's preference. The dimensional requirements of this particular standard are based on anthropometric data based on PATIENTS ranging in physical size from a 146 cm tall female to a 185 cm tall male ⟨A1⟩, a weight of equal to or more than 40 kg and a body mass index (BMI) equal to or more than 17 ⟨A1⟩. For BEDS intended for use with PATIENTS outside this range, all dimensional characteristics in this particular standard should be adjusted accordingly.

Copyright British Standards Institution
Provided by IHS under license with BSI - Uncontrolled Copy
No reproduction or networking permitted without license from IHS
Licensee=Hill Rom Inc/0078415001, User=Laloge, Dennis
Not for Resale, 10/29/2015 08:09:16 MDT

Definition 201.3.131 – TRAPPING ZONE

The term “entrapment” describes an event in which a PATIENT is caught, trapped, or entangled in spaces in or about the SIDE RAIL, mattress, or MEDICAL BED frame.

A1 **Definition 201.3.201 – ADULT**

The body mass index is calculated by the following formula:

$$BMI = \frac{m}{l^2}$$

Where:

m in kg

l in m

The body mass index (BMI) as an additional measure for the shape of the human body was included in IEC 60601-2-52, since the physical size of some patients is indeed inside the limits of the first version of IEC 60601-2 52 (exceeding 146 cm and 40 kg) but nevertheless due to their particular atypical anatomy there might be a risk of being entrapped in the side rails.

The body mass index (BMI) is a measure for the human body shape based on an individual's mass and height. BMI provides a simple numeric measure of a person's thickness or thinness, allowing health professionals to discuss overweight and underweight problems more objectively with their PATIENTS.

For an explanation see also 201.1.1. A1

Definitions 201.3.201 – 201.3.205 – APPLICATION ENVIRONMENTS 1, 2, 3, 4 and 5

The working group discussed many different APPLICATION ENVIRONMENTS in evaluating this particular standard. For example, a maternity bed designed to aid in the birthing process is primarily used with PATIENTS below the age of 50. These PATIENTS generally do not fit into a high entrapment RISK category, thus entrapment guidelines may not be considered, unless the product is designed to be used in various APPLICATION ENVIRONMENTS in NORMAL USE, or there is reasonable foreseeable misuse.

Definition 201.3.212 – MEDICAL BED

This particular standard merges two pre-existing standards: IEC 60601-2-38 (*Particular requirements for the safety of electrically-operated hospital beds*), and EN 1970 (*Adjustable beds for DISABLED PERSONS – requirements and test methods*). Since different products exist within different health-care markets, requirements are divided into different APPLICATION ENVIRONMENTS. Certain products may exist across APPLICATION ENVIRONMENTS, or different APPLICATION ENVIRONMENTS may develop in the future that are not specified in this particular standard. The environment of use has to be addressed through the MANUFACTURER’S RISK MANAGEMENT PROCESS.

A1 **Subclause 201.4.2 – RISK MANAGEMENT PROCESS for ME EQUIPMENT or ME SYSTEMS**

Possible HAZARDS may be: rolling over the SIDE RAIL, entrapment in MEDICAL BED extension and HAZARDS related to the TRAPPING ZONES described in 201.9.2.2. A1

Copyright British Standards Institution
Provided by IHS under license with BSI - Uncontrolled Copy
No reproduction or networking permitted without license from IHS
Licensee=Hill Rom Inc/0078415001, User=Laloge, Dennis
Not for Resale, 10/29/2015 08:09:16 MDT

Subclause 201.5. 101 – Entrapment test tools

The dimensions and weight of the cone tool and cylinder tool derived from the following observation:

a) Cone tool:

For a 95th percentile male head this weight is 5,13 Kg (see *Air Force Research Laboratory Design and Development of Anthropometrically Correct Head Forms for Joint Strike Fighter Ejection Seat Testing – February 2005*).

b) Cylinder tool:

60 mm is a conservative measure of 83 mm neck 5th percentile female.

Subclause 201.6.2 – Protection against electrical shock

In some countries a protective earthing system may not be available or reliable in the home environment (APPLICATION ENVIRONMENT 4).

Subclause 201.7.2.2.101 – Marking of maximum PATIENT weight and SAFE WORKING LOAD

It is important that the RESPONSIBLE ORGANIZATION and/or OPERATOR clearly understand the maximum PATIENT weight and SAFE WORKING LOAD of the MEDICAL BED, and of any ACCESSORY that is intended to support potentially hazardous masses, so that the MEDICAL BED and its ACCESSORIES are not used in ways, which could create a HAZARD.

Subclause 201.7.2.2.105 – Marking of replacement mattresses

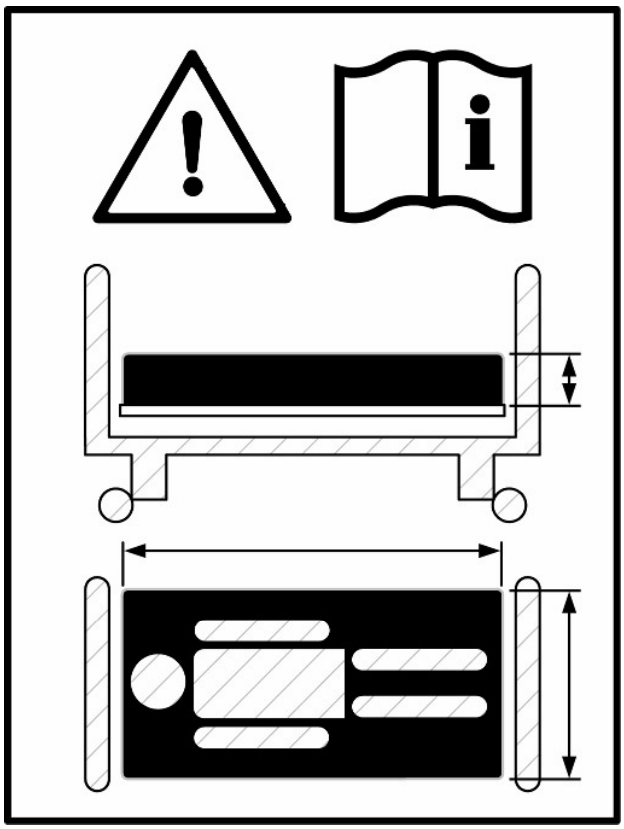

IEC 2139/09

Figure AA.1 – Marking to select recommended mattresses specified by the MANUFACTURER

Copyright British Standards Institution
Provided by IHS under license with BSI - Uncontrolled Copy
No reproduction or networking permitted without license from IHS
Licensee=Hill Rom Inc/0078415001, User=Laloge, Dennis
Not for Resale, 10/29/2015 08:09:16 MDT

Subclause 201.7.2.2.106 – Marking of detachable SIDE RAILS

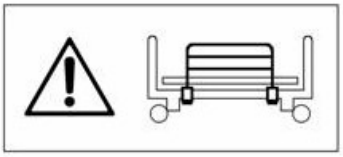

IEC 2140/09

Figure AA.2 – Marking for detachable SIDE RAILS specified by the MANUFACTURER

Subclause 201.7.9.2.5.103 – Angles and height of MEDICAL BED

When determining the adjustable height range of the MEDICAL BED, consideration should be given to regional anthropometrics for both caregiver and/or OPERATOR and/or PATIENT.

Attention should be paid to:

- PATIENT falling from the MEDICAL BED, where a low height minimizes injuries;
- ease of PATIENT entry and egress;
- transfers to and from a wheelchair;
- caregivers' and/or OPERATORS' safe working height in order to minimize back problems.

Subclause 201.7.9.2.5.104 – Maximum mass of MEDICAL BED

Where a MEDICAL BED may be disassembled for transport by hand, knowledge of the mass of the main parts may be useful in avoiding strain.

Subclause 201.9.1 – MECHANICAL HAZARDS of ME EQUIPMENT

General rationale for 201.9.1.101, and 201.9.101: There are various recognized RISKS that have been accepted on the basis of RISK/benefit or RISK/RISK tradeoffs. SPECIALTY MATTRESSES are excluded from testing because the clinical benefits derived from such mattresses can outweigh the RISKS involved with their use, and it might not be possible to satisfy the test requirements without compromising the clinical benefit of the SPECIALTY MATTRESS. However this standard requires a RISK ASSESSMENT to be performed.

The requirements are only applied with the MATTRESS SUPPORT PLATFORM in the flat position unless otherwise indicated. The reason is that there are various clinical benefits associated with the ability of MEDICAL BEDS to perform various articulations. It is not apparent how the functionality of MEDICAL BEDS, particularly the most advanced, most clinically beneficial beds, could be preserved if the requirements were extended to articulated positions. MANUFACTURERS are encouraged to understand the RISK involved and to strive to minimize this RISK by analysis and novel approaches to mitigation, while maintaining clinical utility of the bed.

The dimensional requirements form a baseline, but they are not relevant to every bed application, and they may occasionally interfere with intended usage without mitigating RISK. The MANUFACTURER is responsible for justifying deviations for specialty beds or surfaces in the RISK ANALYSIS.

Copyright British Standards Institution
Provided by IHS under license with BSI - Uncontrolled Copy
No reproduction or networking permitted without license from IHS
Licensee=Hill Rom Inc/0078415001, User=Laloge, Dennis
Not for Resale, 10/29/2015 08:09:16 MDT

Subclause 201.9.1.101 – Protection against PATIENT entrapment in non-moving parts

The dimensional requirements listed in Figures 201.107 and 201.108 and in Table 201.101 are intended to restrict openings in and around the MEDICAL BED system so that parts of the anatomy cannot enter or can pass through easily. Each requirement is based on commonly available anthropometric data. PATIENTS most vulnerable to entrapment are those who have cognitive disability or have uncontrolled body movement. These PATIENTS most often are frail, elderly or confused. Few adverse event reports indicate the angular position of the MATTRESS SUPPORT PLATFORM in which entrapment occurs, or what position the SIDE RAILS are in. Therefore this particular standard requires that entrapment be evaluated by the MANUFACTURER's RISK ASSESSMENT in flat and articulated bed positions, with the SIDE RAILS fully raised and in intermediate positions.

Three key body parts at RISK for life-threatening entrapment in MEDICAL BED systems are the head, neck, and chest.

- Head

The 120 mm dimension is based on the 5th percentile Sri Lanka female head breadth, the distance across the face from ear to ear. Gaps < 120 mm were chosen as this dimension represents a conservative measurement to reduce entrapment. A dimension of 120 mm includes all 5th percentile smallest female head breadth references and most 1st percentile international references.

In case of a permanently FIXED mattress specifically dedicated to the MEDICAL BED and SIDE RAIL and if sliding of the mattress on the SUPPORT MATTRESS PLATFORM is not possible, the test is performed by inserting the 60 mm cylindrical end of the cone tool with 120 mm cone between the permanently FIXED mattress and the SIDE RAIL (A_2 and A_3 areas).

- Neck

The 60 mm dimension is based on the 5th percentile width of a small adult female neck.

It is noted that people of small stature have a 1st percentile female neck diameter of 79 mm (5th percentile = 83 mm.). Several factors, such as neck compressibility, loss of muscle mass in the neck as PATIENTS age, and the asymmetrical shape of the neck, all support a conservative measure of less than 60 mm.

To reduce the RISK of neck entrapment, gaps in the MEDICAL BED system should be small enough to prevent passage of a small neck. Additionally to reduce neck entrapment with regards to wedging of the neck, angles for V-shaped openings (Reference EN 13451-1) should be greater than 60°. The 60° angle reflects an understanding that at some point, a narrow angle creates a v-shape space or geometry that could be conducive to entrapment. The 60° angle was chosen by reviewing the TOOLS to assess entrapment RISK for swimming pool equipment (EN 13451-1, *Swimming pool equipment – Part 1: General safety requirements and test Methods*), and a corresponding mathematical analysis which shows that when a cylinder-shaped weight is supported by two offsetting force vectors, each of the perpendicular forces becomes equal to the weight of the cylinder when the angles relative to the vertical are 60°. An assumption is made that 60° may be considered to be an inflection point for angles where wedging may become a prominent consideration (see Figures AA.5 and AA.6).

See also Annex CC Particular guidance for assessing v-shaped opening

Copyright British Standards Institution
Provided by IHS under license with BSI - Uncontrolled Copy
No reproduction or networking permitted without license from IHS
Licensee=Hill Rom Inc/0078415001, User=Laloge, Dennis
Not for Resale, 10/29/2015 08:09:16 MDT

- Chest

The 318 mm is based on the 95th percentile male chest depth. There have been reports of chest entrapment in MEDICAL BEDS in the space between split SIDE RAILS. To avoid chest entrapments, the spaces should be wide enough (greater than 318 mm) to allow a large chest to slip through without being entrapped.

Specification of cone tool and cylinder tool used to evaluate entrapment see Figure 201.103a and Figure 201.103b.

- Rationale for measurement of B

The measurement of area B includes two separate measurements: a measurement of the gap beneath the SIDE RAIL (see Figure AA.5), and a measurement of the interface angle at the mattress height, plus and minus 2 cm (Figure AA.6). The decision to include the mattress height in the measurement of the interface angle comes from an analysis of the forces on a neck with and without the mattress (Figures AA.3 and AA.4). It is demonstrated that the mattress plays a significant part in entrapment where there is a wedging effect. It is understood that the measurement is done at the mattress height as specified by the MANUFACTURER. The measurement should represent a most adverse condition of the MEDICAL BED (i.e., smallest thickness mattress –2 cm, and thickest mattress +2 cm).

The angle measurements are taken for the range defined by (4) in Figure AA.6. For complex geometries in this range, measure to the tangential(s) of the SIDE RAIL.

See also Annex CC Particular guidance for assessing v-shaped opening

Copyright British Standards Institution
Provided by IHS under license with BSI - Uncontrolled Copy
No reproduction or networking permitted without license from IHS
Licensee=Hill Rom Inc/0078415001, User=Laloge, Dennis
Not for Resale, 10/29/2015 08:09:16 MDT

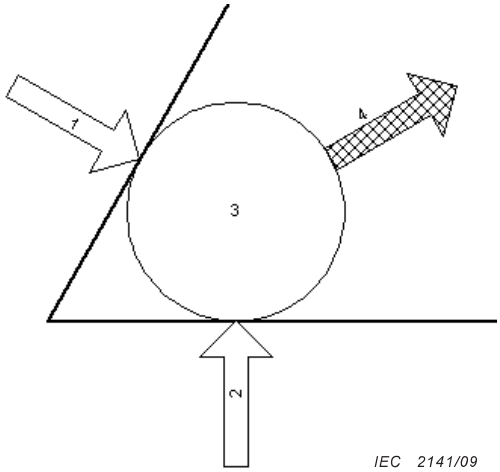

Key

1 Normal force from SIDE RAIL

2 Normal force from MATTRESS SUPPORT PLATFORM

3 Neck

4 Resultant (ejecting) force

Figure AA.3 –
Resultant forces without mattress

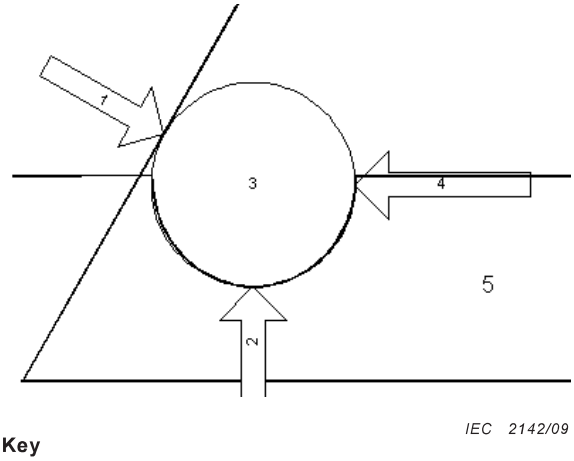

Key

1 Normal force from SIDE RAIL

2 Normal force to neck from mattress

3 Neck

4 Resultant force from mattress

5 Mattress

Figure AA.4 –
Resultant forces with mattress

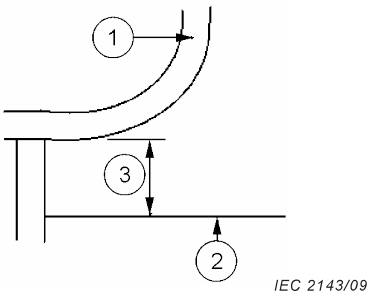

Key

1 SIDE RAIL

2 MATTRESS SUPPORT PLATFORM

3 Gap measurement (<60 mm)

Figure AA.5 –
Example of 60 mm gap measurement of B

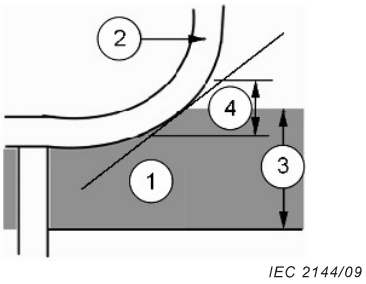

Key

1 Mattress

2 SIDE RAIL

3 Mattress height(s) (specified by MANUFACTURER)

4 Angle measurement zone

Figure AA.6 –
Angle measurement example of B

- Rationale for measurement of D

Area D is the space between the inside surface of the SIDE RAIL and the mattress compressed by the weight of a PATIENT'S head. The space should be small enough to prevent head entrapment when taking into account the mattress compressibility, any lateral shift of the mattress or SIDE RAIL, and the degree of play from loosened SIDE RAILS. A dimension of less

Copyright British Standards Institution
Provided by IHS under license with BSI - Uncontrolled Copy
No reproduction or networking permitted without license from IHS
Licensee=Hill Rom Inc/0078415001, User=Laloge, Dennis
Not for Resale, 10/29/2015 08:09:16 MDT

than 120 mm is required by this particular standard because the head is presumed to enter the space before the neck.

The goal of testing Area D is to assess if a PATIENT could trap his head in the horizontal space between the mattress and inside of the SIDE RAIL.

Additional examples of measurement of D are given in Figures AA.7 to AA.10.

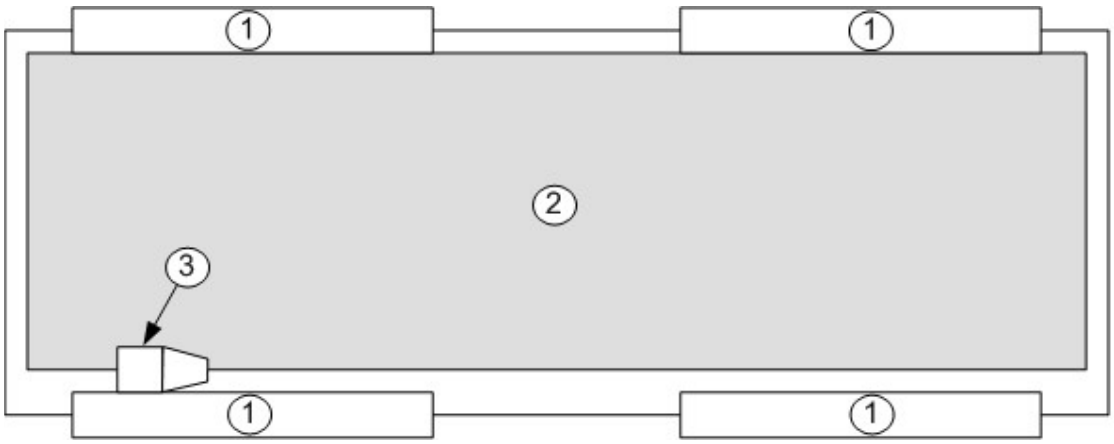

IEC 2145/09

Key

1 SIDE RAILS
2 Mattress
3 Cone tool

Figure AA.7 – Placement of measurement TOOL for measurement of D

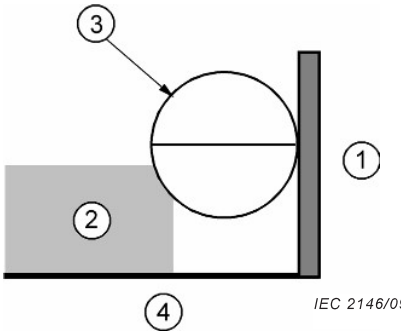

IEC 2146/09

Key

1 SIDE RAIL
2 Mattress
3 Cone tool
4 MATTRESS SUPPORT PLATFORM

Figure AA.8 – Example of area D measurement that passes

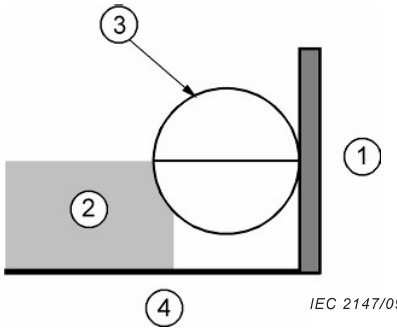

IEC 2147/09

Key

1 SIDE RAIL
2 Mattress
3 Cone tool
4 MATTRESS SUPPORT PLATFORM

Figure AA.9 – Example of area D measurement that fails

Copyright British Standards Institution
Provided by IHS under license with BSI - Uncontrolled Copy
No reproduction or networking permitted without license from IHS
Licensee=Hill Rom Inc/0078415001, User=Laloge, Dennis
Not for Resale, 10/29/2015 08:09:16 MDT

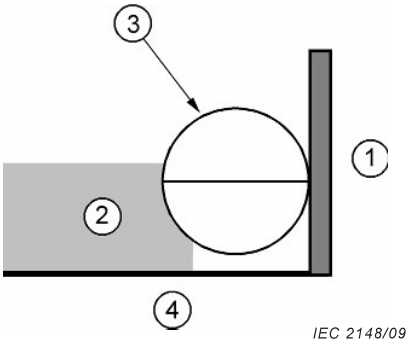

Key

1 SIDE RAIL

2 Mattress

3 Cone tool

4 MATTRESS SUPPORT PLATFORM

Figure AA.10 – Example of area D measurement that fails (on limit)

[AC1] *Text deleted* [AC1]

Some artist sketches are provided below in order to demonstrate how entrapment may occur in each of the areas:

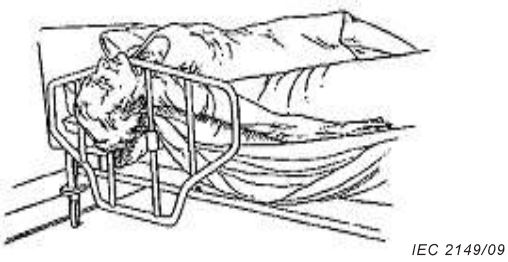

Figure AA.11 – Example of potential PATIENT entrapment in area A within the SIDE RAIL

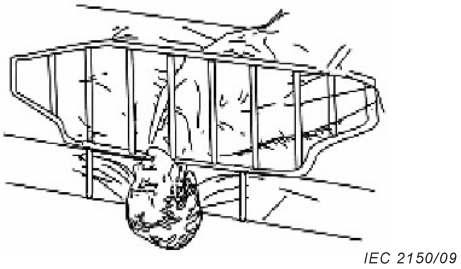

Figure AA.12 – Example of potential PATIENT entrapment in area A below the SIDE RAIL

Figure AA.13 – Example of potential PATIENT entrapment in area B

Figure AA.14 – Example of potential PATIENT entrapment in area C between split SIDE RAIL

Copyright British Standards Institution
Provided by IHS under license with BSI - Uncontrolled Copy
No reproduction or networking permitted without license from IHS
Licensee=Hill Rom Inc/0078415001, User=Laloge, Dennis
Not for Resale, 10/29/2015 08:09:16 MDT

IEC 2153/09

Figure AA.15 – Example of potential PATIENT entrapment in area C between SIDE RAIL and HEAD BOARD

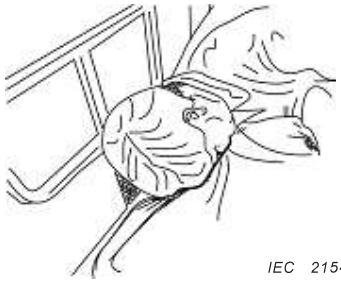

IEC 2154/09

Figure AA.16 – Example of potential PATIENT entrapment in area D

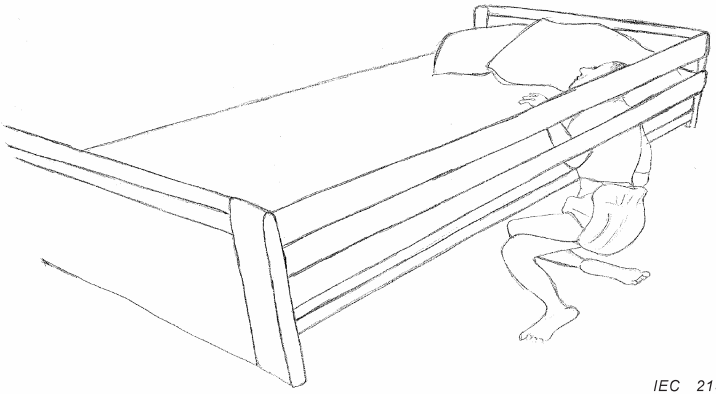

IEC 2155/09

Figure AA.17 – Example of potential PATIENT entrapment in area A below a single piece SIDE RAIL

- Rationale for test force of 250 N instead of 50 N for side rail test:

The investigations of incidents with entrapment in full-length side rails that fulfil the standard EN 1970 or IEC 60601-2-38 regarding the measurement *A*, show that seven incidents were registered. Four of these incidents occurred between the lower bar and the MATTRESS SUPPORT PLATFORM, the other three occurred between the upper (or middle) bar and the lower bar of the SIDE RAIL.

In five of the seven incidents the PATIENTS died, one of seven led to a fracture and one had no serious consequences. The five PATIENTS died due to entrapment of the chest or the neck (body completely slipped under the bar (see Figure AA.17)).

These results lead to the conclusion that the current test force of 50 N in IEC 60601-2-38 and the 30 N in EN 1970 is not sufficient.

The detailed review shows that in some cases the whole body of the PATIENT was lying on the bar and even when the PATIENT was very thin, 40 kg to 45 kg (estimated weight, weight was not registered) the body would have been pressing onto the bar. The bar bent and the (thin) person slipped with the legs under the bar and got stuck with the chest or the neck.

Even when it is considered that not the whole weight might be applied on the bar, it is estimated that at least 25 kg are pressed against it. Based on this estimate, the test force has been raised to 250 N for the testing of dimension A of SIDE RAILS.

Copyright British Standards Institution
Provided by IHS under license with BSI - Uncontrolled Copy
No reproduction or networking permitted without license from IHS
Licensee=Hill Rom Inc/0078415001, User=Laloge, Dennis
Not for Resale, 10/29/2015 08:09:16 MDT

Subclause 201.9.101 – Protection against inadvertent PATIENT falls

The requirement for SIDE RAILS height to be at least 220 mm above the MATTRESS SUPPORT PLATFORM in at least 50 % of the length of the MATTRESS SUPPORT PLATFORM is intended to ensure that SIDE RAILS reduce the RISK of the PATIENT accidentally slipping or rolling off the mattress.

Due to the nature of the SIDE RAIL entrapment HAZARD, compliance with the listed dimensional requirements is not in itself considered adequate to address all possible dangers (including entrapment of legs and arms, or the RISK of a PATIENT falling from an attempt to climb over the SIDE RAILS). For this reason, an additional requirement to perform a RISK ASSESSMENT (evaluating all issues pertaining to SIDE RAILS) has been included.

The 220 mm dimension is the minimum height requirement for the top edge of a SIDE RAIL above the mattress and is based on the midpoint (center of gravity) of an adult male torso at the 95th percentile lying on the shoulder on a compressed mattress.

A1 *Text deleted* A1

The minimum height requirement for SIDE RAILS may increase the RISK of injury when a PATIENT climbs over and falls. The minimum length requirement on SIDE RAILS may increase entrapment RISK by reducing egress points for the PATIENT, and while it may decrease inadvertent fall RISK from rolling out of MEDICAL BED, it may increase RISK where PATIENTS may opt to climb over the SIDE RAILS. The dimensional requirements in this particular standard reflect an attempt to make the best RISK tradeoffs on the basis of available information. Future data may demonstrate that some of these requirements should be revised at a future date.

Subclause 201.9.2.3.1 – Unintended movement

The probability of inadvertent motion due to component failure is significantly reduced when the lockout is engaged.

Several accidents have occurred involving foot-operated control pedals where PATIENTS, OPERATOR or visitors were injured or killed in the UNDERCARRIAGE of MEDICAL BEDS. The majority of the reported accidents occurred in long-term care environments. The factors of primary significance are:

– the existence of exposed MECHANICAL HAZARDS in the moving UNDERCARRIAGE,
– foot-operated control design which allows inadvertent activation, especially by unintended users,
– intermittent caregiver supervision, PATIENTS or OPERATORS accidentally falling or crawling over the control, and
– PATIENT, resident, or visitor characteristics such that the OPERATOR of the control lacks normal adult judgement.

Some of these factors need to exist simultaneously to create a HAZARD of mechanical injury in the MEDICAL BED UNDERCARRIAGE, so elimination of some may eliminate the RISK. The RISK for this HAZARD varies with the care environment. In APPLICATION ENVIRONMENT 1 and APPLICATION ENVIRONMENT 5 (intensive care and ambulatory), PATIENTS are generally under nearly continuous supervision, which minimizes RISK without regard to PATIENT characteristics or the MEDICAL BED design. RISK is comparatively high in long-term care unless protections are implemented in the MEDICAL BED design, because of intermittent caregiver supervision and resident mobility and/or mental characteristics of the MEDICAL BED occupants.

Copyright British Standards Institution
Provided by IHS under license with BSI - Uncontrolled Copy
No reproduction or networking permitted without license from IHS
Licensee=Hill Rom Inc/0078415001, User=Laloge, Dennis
Not for Resale, 10/29/2015 08:09:16 MDT

Experience in some countries with foot control (some incidents over recent years, including several deaths) shows that:

– incidents are more frequent in long-term services and with weak, disoriented or agitated PATIENTS but some other incidents occurred in acute care services or intensive care services and with normal adult judgement PATIENT;
– foot controls can generate an unacceptable RISK regarding its utility;
– a manual disconnection of foot controls or MOTION LOCKOUT CONTROL, without an another safety system, may not be an adequate solution to prevent unacceptable RISK because this function is not used consistently by OPERATOR.

Subclause 201.9.4.2.2 – Instability excluding transport

- Use of 1 100 N for patient weight

1 100 N is used to simulate a PATIENT, resident or visitor weight. 110 kg is the 99th percentile male weight as per *Adultdata, the Handbook of Adult Anthropometric and Strength Measurements*, by Laura Peebles and Beverley Norris. 110 kg corresponds to 1 078 N, or approximately 1 100 N.

- Explanation of the area on which load is applied

For the lateral test, having 2 persons sitting on the side edge of the MEDICAL BED, as close as possible to the end of the MEDICAL BED is reasonable. Since a 95th percentile male has a hip breadth, while sitting, of 466 mm [2], the weight of 2 × 1 100 N = 2 200 N is distributed over a length of 950 mm (466 mm rounded to 475 mm, × 2) and a width of 250 mm as in IEC 60601-2-38 and EN 1970. For the single person load in the longitudinal test (with fixed HEAD/FOOT BOARDS), the weight would be distributed over an area of 475 mm × 250 mm and these loads are placed on each side of the MEDICAL BED since the HEAD/FOOT BOARDS prevents sitting on the end of the MEDICAL BED. For the longitudinal test where the FOOT BOARD is removable, the 2 200 N load is placed at the foot-end of the MEDICAL BED and distributed across the entire width of the MEDICAL BED, which is about 950 mm.

Testing is done without the SAFE WORKING LOAD, as it is common for visitors to sit on the side or end of a MEDICAL BED when the PATIENT is NOT in the MEDICAL BED; this is the worst case. The SAFE WORKING LOAD in place on the MEDICAL BED during the test would only help stabilise the MEDICAL BED and is therefore not used. The loads specified in the lateral and longitudinal stability tests should be placed on the side or end of the MEDICAL BED that is heaviest in order to maximise the potential for tipping, but since it is difficult to determine which side is heaviest, the test is done on both sides and both ends.

- Explanation for use of 1850 N load in application environment 4

There have not been reported any accidents with the loading of 1 350 N at the foot end of the bed as required in EN 1970. The MEDICAL BED in APPLICATION ENVIRONMENT 4 is still safe for the MEDICAL BED PATIENT to sit anywhere on the MEDICAL BED, as the maximum PATIENT load always shall be used both for this test and the lateral stability test, if it exceeds 1 850 N. Higher loads for the test will be in conflict with ergonomic requirement in APPLICATION ENVIRONMENT 4.

Subclause 201.9.4.2.4.3 – Movement over a threshold

The use of 0,8 m/s instead of 0,4 m/s in the general standard is necessary to achieve that the MEDICAL BED will pass over the threshold with all castors. The speed of 0,8 m/s represents the real situation, because the OPERATOR will use this speed to pass the threshold. Therefore the construction of MEDICAL BEDS in APPLICATION ENVIRONMENTS 1, 2, 3 and 5 has to withstand this situation.

Copyright British Standards Institution
Provided by IHS under license with BSI - Uncontrolled Copy
No reproduction or networking permitted without license from IHS
Licensee=Hill Rom Inc/0078415001, User=Laloge, Dennis
Not for Resale, 10/29/2015 08:09:16 MDT

Subclause 201.9.4.3.1 – Instability in transport

The 6° angle was determined from building code regulations in different countries. Such regulations set the maximum angle allowed for floors at 5,7° in Canada, 4,76° in the UK, 4,76° in the USA and 2,86° in Denmark.

Subclause 201.9.8.2 – TENSILE SAFETY FACTOR

The safety factor requirements from pre-existing standard IEC 60601-2-38 and EN 1970 were demonstrated to be sufficient by several years of field application. Consequently these requirements are carried over into this particular standard. Also, in the normative Annex BB, durability tests are given for specific APPLICATION ENVIRONMENTS with regard to the real situation over the lifetime of a MEDICAL BED.

Subclause 201.9.8.3.2 – Static forces due to loading from persons

- Static strength

EN 1970 was substantially similar to IEC 60601-2-38 in this regard with the exception of the MEDICAL BED being in the worst-case position. The general standard refers to the worst-case as the "most disadvantageous" position. The general standard text was therefore chosen, where "most disadvantageous height" refers to the up/down position of the MEDICAL BED. The test method requires also most disadvantageous length, as this could be worse case for MEDICAL BEDS, with built-in or added length adjustment. Additionally, a 1-hour time duration should be applied only when assemblies contain elements subject to material creep (plastics or other non-metals). Where all metal assemblies are being tested, timeframes above 1 min are not needed (see IEC 60601-1:2005, subclause 9.8.2, Note 2).

- ACCESSORIES strength

Terminology of the general standard was adopted. Where ACCESSORIES may be cycled to induce similar wear of components, use of the SAFE WORKING LOAD is acceptable to prove compliance with the requirement, provided expected wear is simulated on the ACCESSORY or attachment point prior to testing. The expected distribution of weight upon the ACCESSORY during reasonably foreseeable misuse should be considered when testing the ability of the ACCESSORY load support.

The 1 h requirement is only required in designs where material creep is a concern (plastic parts are used). For assemblies that are all metal, 1 min is enough to determine if the design is capable of withstanding the SAFE WORKING LOAD times the TENSILE SAFETY FACTOR (see IEC 60601-1:2005, subclause 9.8.2 Note 2).

Subclause 201.9.8.3.3 – Dynamic forces due to loading from persons

- Loading from persons

The above requirements were added due to issues seen in the field that were perceived to have been caused by improper specification of dynamic strength. The issues included the failure of the MEDICAL BED or undercarriage assemblies, resulting in the MEDICAL BED surface dropping to the lowest level. It was therefore felt that a minimum standard test should be specified. The dynamic strength tests are designed to be a minimum standard to assess the dynamic strength of the MEDICAL BED . Testing should be modified as per the MANUFACTURER'S RISK ASSESSMENT program based on such things as elimination of RISK by design, normal and abuse conditions by the OPERATOR or PATIENT, environmental issues and others. Components, which loosen, or malfunction during tests that do not contribute to additional RISK, or sudden collapse of product, may be replaced.

Copyright British Standards Institution
Provided by IHS under license with BSI - Uncontrolled Copy
No reproduction or networking permitted without license from IHS
Licensee=Hill Rom Inc/0078415001, User=Laloge, Dennis
Not for Resale, 10/29/2015 08:09:16 MDT

Subclause 201.9.8.3.3.2 – Dynamic testing of the height adjustment mechanism

The experience of the experts from test houses and MANUFACTURER with the market observation leads to the result that a dynamic test as described is necessary to provide a minimum of safety between reasonable service intervals.

The number of 3 000 cycles is calculated on the base of 1 to 2 cycles a day, which represents a product life time of approximately 4-8 years.

Subclause 201.9.8.3.3.3 – SIDE RAIL strength and latch reliability

This requirement combines the proposed cycle test with the load test in IEC 60601-2-38 to ensure proper latching of the SIDE RAIL after a simulated life cycle. "HAZARD" was changed to "RISK" to use terminology of IEC 60601-1:2005. 30 000 cycles is used considering an average product life cycle of 10 years, with 4 usages per day (14 600 cycles) multiplied by a safety factor of 2. The number of cycles should be representative of the actual product life cycle, and product estimated usage of the SIDE RAILS. Components, which loosen, or malfunction during tests that do not contribute to additional RISK or sudden collapse of SIDE RAILS, may be replaced.

- SIDE RAIL latch

Lateral and longitudinal cycling: The number of cycles chosen is arbitrary in an effort to reproduce the action of an agitated PATIENT exerting reasonably foreseeable misuse on the SIDE RAIL. Once again, testing should be tailored to the MANUFACTURER'S indicated life cycle, estimated SIDE RAIL usage and RISK ANALYSIS with regards to number of cycles, forces applied and direction of force.

The specified maximum PATIENT weight is used to simulate a PATIENT climbing over the SIDE RAIL, as an additional reasonably foreseeable misuse. No data has been presented on PATIENTS over 1 112 N climbing over SIDE RAILS, resulting in a fall.

100 N is selected for this test as an approximation of an agitated PATIENT shaking the SIDE RAIL from the MEDICAL BED.

For Figure 201.117 Force A represents someone pulling up on the SIDE RAIL, the application of force should be on top of the SIDE RAIL

For Figure 201.117 Force B represents a PATIENT climbing over the top of the SIDE RAIL, the force should be applied to top the SIDE RAIL also.

For Figure 201.117 Forces C, D, E and F represent a PATIENT/OPERATOR using the SIDE RAIL as a grab handle.

Subclause 201.11.8 – Interruption of power supply/SUPPLY MAINS to ME EQUIPMENT

Examples of emergency procedures (as specified by the MANUFACTURER) that are needed during an interruption of the power supply/SUPPLY MAINS to MEDICAL BEDS are:

1) positions for cardiopulmonary resuscitation (CPR), for example, emergency back flattening;
2) others as specified by the MANUFACTURER.

Subclause 201.13.1.4 – Specific MECHANICAL HAZARDS

The U.S. Food and Drug Administration incident database was reviewed in the preparation of this standard to relate field incidents of unintended movement to the concept of SINGLE FAULT

Copyright British Standards Institution
Provided by IHS under license with BSI - Uncontrolled Copy
No reproduction or networking permitted without license from IHS
Licensee=Hill Rom Inc/0078415001, User=Laloge, Dennis
Not for Resale, 10/29/2015 08:09:16 MDT

CONDITION and abnormal operation in IEC 60601-1:2005. This review indicates such incidents mainly manifest when an electrically driven actuation starts unexpectedly and drives to its limit in one direction. The apparent cause is a fault occurring in MEDICAL BED function controls.

Abnormal operation/fault condition requirements emphasize protection against faults in the motion control systems of electrically powered MEDICAL BEDS. An interpretation is also developed to extend the SINGLE FAULT SAFE concept for unintended motion to non-electrically powered MEDICAL BEDS and pneumatic and hydraulic subsystems of electrical MEDICAL BEDS.

The requirement to provide a means (not accessible by the PATIENT) for deactivating controls that are accessible by the PATIENT is retained from the previous standard, but regarded as a human factors aspect that is not inherently integral to SINGLE FAULT CONDITION and abnormal operation requirements.

Tradeoffs are required among human factors, clinical benefits available from positioning the MATTRESS SUPPORT PLATFORM, and technology. For instance, it is possible to reduce the probability of a SINGLE FAULT CONDITION causing a movement without human intervention by the use of redundant circuits and parallel switches, which have to be closed simultaneously. Such a requirement is out of proportion to the RISK for the vast majority of PATIENTS and clinical situations. It would degrade the USABILITY of the product for clinical users and be equivalent to removing PATIENT controls for those PATIENTS whose lack of dexterity or medical condition prevents them from operating two controls simultaneously.

This standard introduces the concept of the MOTION LOCKOUT CONTROL. The MOTION LOCKOUT CONTROL provides a means to reconcile varying PATIENT needs. Some PATIENTS need controls with a high degree of USABILITY and have little RISK exposure in the event of rare unintended motion. Other PATIENTS require exceptional protection against possible unintended motion, even if control ergonomics are entirely sacrificed. A MOTION LOCKOUT CONTROL deployable at OPERATOR option can meet both needs.

Subclause 201.15.3.5 – Rough handling test

The reason for the difference to the speed of 0,8 m/s used in 201.9.4.2.4.3 is because the OPERATOR normally did not intend to hit the door frame and will stay with the speed (0,4 m/s) according to the requirements of the general standard.

Subclause 201.15.4.4 – Indicators

MEDICAL BEDS connected to MAINS VOLTAGE are generally operational at all times. This is generally understood by the OPERATORS; therefore no indicator light is required.

Subclause 201.15.4.6.2 – Limitation of movement

Loss of blood flow to legs (from over-flexing of the torso) or build-up of blood or other fluids in the abdomen can cause severe damage to PATIENT.

Copyright British Standards Institution
Provided by IHS under license with BSI - Uncontrolled Copy
No reproduction or networking permitted without license from IHS
Licensee=Hill Rom Inc/0078415001, User=Laloge, Dennis
Not for Resale, 10/29/2015 08:09:16 MDT

Annex BB
(normative)

Design requirements and recommendations for MEDICAL BEDS

BB.1 General

Although it is recognized that the responsibility for defining the INTENDED USE (and therefore the configuration of features) of the MEDICAL BED rests with the MANUFACTURER, certain factors shall be taken into consideration. The following is intended both as requirements for MEDICAL BEDS intended for certain APPLICATION ENVIRONMENTS and also as guidelines for MANUFACTURERS when designing MEDICAL BEDS for other APPLICATION ENVIRONMENTS.

Table BB.1 indicates normative and informative requirements for the different APPLICATION ENVIRONMENTS 1 to 5.

Table BB.1 – Normative and informative requirements for different APPLICATION ENVIRONMENTS 1 to 5

Clause	APPLICATION ENVIRONMENT 1	APPLICATION ENVIRONMENT 2	APPLICATION ENVIRONMENT 3	APPLICATION ENVIRONMENT 4	APPLICATION ENVIRONMENT 5
BB.2.1	Normative	Normative	Normative	Normative	Normative
BB.2.2	Normative	Normative	Normative	Normative	Normative
BB.2.3	Normative	Normative	Normative	Normative	Normative
BB.2.4	Normative	Normative	Normative	Normative	Normative
BB.3.1	Informative	Informative	Informative	Normative	Informative
BB.3.2	Informative	Informative	Informative	Normative	Informative
BB.3.3.1	Normative	Normative	Normative	Normative	Normative
BB.3.3.2	Normative	Normative	Normative	Normative	Normative
BB.3.3.3	Informative	Informative	Informative	Normative	Informative
BB.3.3.4	Informative	Informative	Informative	Normative	Informative
BB.3.3.5	Informative	Informative	Informative	Normative	Informative
BB.3.3.6	Informative	Informative	Informative	Normative	Informative
BB.3.3.7	Informative	Informative	Informative	Normative	Informative
BB.3.4	Informative	Informative	Informative	Normative	Informative
BB.4.1	Normative	Normative	Normative	Normative	Normative
BB.4.2	Informative	Informative	Informative	Normative	Informative
BB.4.3	Normative	Normative	Normative	Normative	Normative
BB.4.4	Normative	Normative	Normative	Normative	Normative
BB.4.4/dash 1	Informative	Informative	Informative	Normative	Informative
BB.4.4dash 2	Informative	Informative	Informative	Normative	Informative
BB.4.4/dash 3	Normative	Normative	Normative	Normative	Normative
BB.4.4/dash 4	Informative	Informative	Informative	Normative	Informative
BB.4.4/dash 5	Normative	Normative	Normative	Normative	Normative

Copyright British Standards Institution
Provided by IHS under license with BSI - Uncontrolled Copy
No reproduction or networking permitted without license from IHS
Licensee=Hill Rom Inc/0078415001, User=Laloge, Dennis
Not for Resale, 10/29/2015 08:09:16 MDT

BB.2 Strength and durability

BB.2.1 General

It is recognized that all MEDICAL BEDS shall provide adequate levels of protection from HAZARDS throughout their EXPECTED SERVICE LIFE. The following tests are presented as methods for MANUFACTURERS to use in order to help determine if appropriate levels of protection are maintained during that period. The tests shall be performed in the sequence in which they are listed.

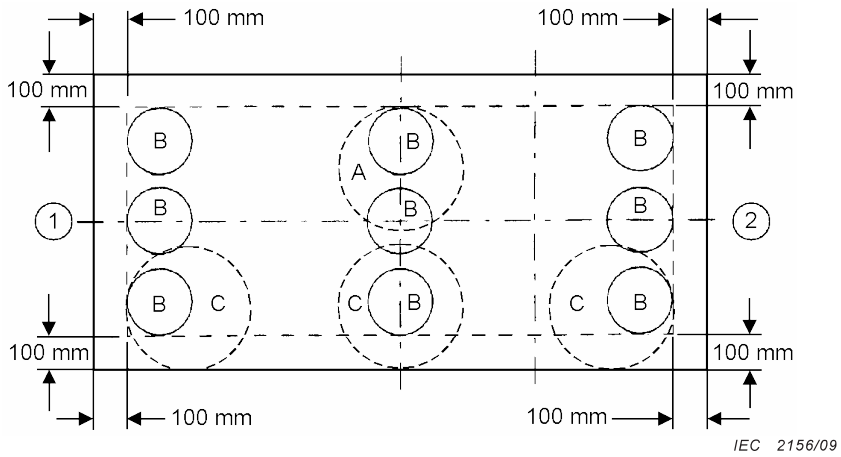

Key

Circle "B" is used for impact testing according to BB.2.2.

Circle "C" is used for impact testing according to BB.2.3.

Figure BB.1 – Other areas of possible impact testing

BB.2.2 The effect of impacts to the MATTRESS SUPPORT PLATFORM

The MEDICAL BED shall be able to withstand the effect of impacts to the MATTRESS SUPPORT PLATFORM being applied during NORMAL USE.

Compliance is checked by the following test:

Place the mattress, as specified by the MANUFACTURER, onto the MATTRESS SUPPORT PLATFORM, in a position in which moving element are free of supporting elements and their inclination is less than 7° in relation to horizontal, and if height-adjustable, the MATTRESS SUPPORT PLATFORM shall be placed in the middle of the possible range of the adjustment.

From a height of 180 mm above the mattress, drop the impactor (see Figure BB.2) onto the MEDICAL BED 20 times onto each of the locations marked "B" in Figure BB.1. The impactor shall be allowed to fall freely, but guides may be used to help insure that the impacts occur as close as is possible to the recommended locations.

After application of the load, no elements of the MEDICAL BED shall become loose, fractured or present any HAZARD.

Copyright British Standards Institution
Provided by IHS under license with BSI - Uncontrolled Copy
No reproduction or networking permitted without license from IHS
Licensee=Hill Rom Inc/0078415001, User=Laloge, Dennis
Not for Resale, 10/29/2015 08:09:16 MDT

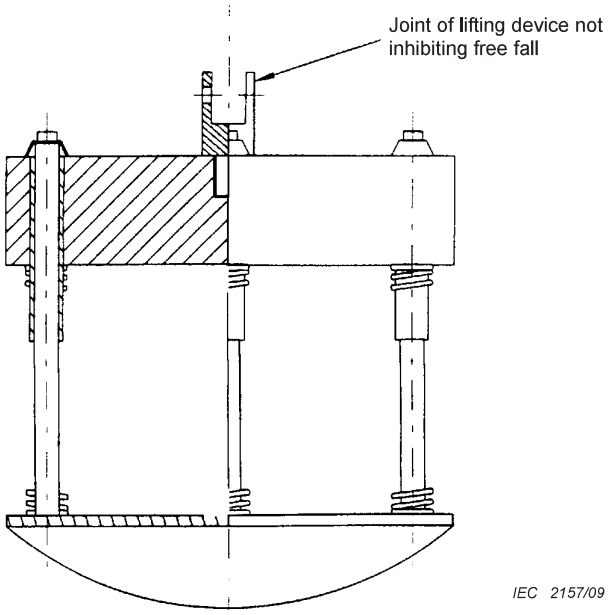

Figure BB.2 – Impactor

The impactor body is approximately 200 mm in diameter and is separated from the striking surface by helical compression springs. The body is free to move on a line perpendicular to the plane of the central area of the striking surface. The total mass of the assembly shall be 25 kg ± 0,1 kg and the body and its associated parts (minus the springs) shall have a mass of 17 kg ± 0,1 kg.

The combined spring rate (for the system) shall be 6,9 N/mm ± 1 N/mm and the total friction resistance of the moving parts is between 0,25 N and 0,45 N. When the spring system is compressed to a load of 1 040 N ± 5 N, the remaining compression distance shall be 60 mm minimum.

The striking surface shall be a rigid circular object, (200 ± 5) mm in diameter, the face of which has a convex spherical curvature of 300 mm radius with a 12 mm front edge radius.

BB.2.3 The effect of loading on the edge of the MATTRESS SUPPORT PLATFORM

The MEDICAL BED shall be able to withstand the effect of loading on the edge of the MATTRESS SUPPORT PLATFORM as applied during NORMAL USE.

Compliance is checked by the following test:

Place the MEDICAL BED in its flat position. If the BED-LIFT is separate from a MATTRESS SUPPORT PLATFORM, mount a TEST BED BOARD to the BED-LIFT.

Adjust the height to the most adverse position.

Load three loading pads with a load of 750 N each to the MATTRESS SUPPORT PLATFORM to the locations marked "C" in Figure BB.1.

Examine the specimen during and after application of the loads to determine if the deflections present any HAZARD.

Copyright British Standards Institution
Provided by IHS under license with BSI - Uncontrolled Copy
No reproduction or networking permitted without license from IHS
Licensee=Hill Rom Inc/0078415001, User=Laloge, Dennis
Not for Resale, 10/29/2015 08:09:16 MDT

After application of the loads, no elements of the BED *shall become loose, fractured or present any* HAZARD.

The deflection shall not be greater than 40 mm during application of the loads and not greater than 10 mm measured in relation to the floor after removal of the loads.

BB.2.4 Durability of the moveable sections (if provided) of the MATTRESS SUPPORT PLATFORM

The moveable sections of the MATTRESS SUPPORT PLATFORM shall comply with the following test:

Apply the SAFE WORKING LOAD *distributed as indicated in Figure 201.115 on the* MATTRESS SUPPORT PLATFORM.

Each of the moveable sections of the MATTRESS SUPPORT PLATFORM *are operated through their full range of travel as in* NORMAL USE.

The test is performed for 1 000 cycles.

Inspect the MEDICAL BED *5 min after cycling is completed.*

After application of the load, no elements of the MEDICAL BED *shall become loose, fractured or present any* HAZARD *and deformation of less than 10 mm (after removal of the load) from the corresponding measurements taken before the application of the load is acceptable.*

BB.3 Human factors (ergonomic)

BB.3.1 General

It is recognized that for a MEDICAL BED to accommodate the medical practices and procedures for which it will be used, the interaction of the human body with the ME EQUIPMENT shall be considered as a method of assuring efficient and safe operation. The following is presented for consideration when addressing these issues for MEDICAL BEDS in APPLICATION ENVIRONMENTS 1, 2, 3 and 5. For MEDICAL BEDS intended for APPLICATION ENVIRONMENT 4, BB.2 is normative.

NOTE The following may not be the only way to address the issues and any dimensions should be based on statistical analyses of regional populations. When used, appropriate dimensions should always be determined based on anthropometric data for the population in the area in which the MEDICAL BED is intended to be used.

BB.3.2 Range of adjustment of the height of the MATTRESS SUPPORT PLATFORM

Required/recommended range of adjustment (if applicable) of the height of the MATTRESS SUPPORT PLATFORM above the floor:

The MATTRESS SUPPORT PLATFORM, in its flat position shall/should have a range of adjustment, which at least allows positioning between 400 mm and 800 mm above the floor, measured at the uppermost part of the MATTRESS SUPPORT PLATFORM.

MEDICAL BEDS without the possibility of adjustment of height are only suitable for persons not needing caregivers.

BB.3.3 Dimensions for handles and pedals

BB.3.3.1 All handles and pedals shall/should be reachable from normal working positions and be placed so they allow operations to be carried out in a safe and ergonomic manner.

Copyright British Standards Institution
Provided by IHS under license with BSI - Uncontrolled Copy
No reproduction or networking permitted without license from IHS
Licensee=Hill Rom Inc/0078415001, User=Laloge, Dennis
Not for Resale, 10/29/2015 08:09:16 MDT

BB.3.3.2 Location and configuration of all buttons / switches / actuators shall/should minimize the RISK of unintentional activation.

BB.3.3.3 The surface of buttons shall/should at least cover a circle of 15 mm in diameter. Any distance between buttons shall/should be more than 10 mm.

The buttons may have any shape, e.g. they need not to be circular.

BB.3.3.4 The free distance between any handle (those parts intended to be grabbed) requiring an operating force of more than 10 N and any construction part shall/should be more than 35 mm.

BB.3.3.5 The free distance between the upper side of any pedal (those parts intended to be stepped on) and any construction part shall/should be more than 75 mm.

BB.3.3.6 The diameter of operating handles requiring an operating force of more than 10 N shall/should be between 19 mm and 43 mm.

BB.3.3.7 Pedals shall/should not be more than 300 mm above the floor.

BB.3.4 Operating forces for handles and pedals

BB.3.4.1 In the case of electrically operated functions, the force to operate the control unit buttons shall/should be less than 5 N.

BB.3.4.2 In the case of non-electrically operated functions, the force to release operating handles shall/should be no more than 10 N and the force required to lift any part of the MATTRESS SUPPORT PLATFORM shall/should be no more than 200 N, when loads are fixed to the MATTRESS SUPPORT PLATFORM as shown in Figure 201.115, with their centre of gravity in the middle of the sections.

BB.3.4.3 The static force to operate pedals shall/should be no more than 300 N when loads are fixed to the MATTRESS SUPPORT PLATFORM, as shown in Figure 201.115, with their centre of gravity in the middle of the sections.

BB.3.4.4 For MOBILE MEDICAL BEDS intended to transport PATIENTS, the force required to initiate movement of the MEDICAL BED with the SAFE WORKING LOAD shall/should not exceed 160 N. The force required to maintain movement (after it has been initiated) shall/should not exceed 85 N.

BB.4 Functionality

BB.4.1 General

Frequently, MEDICAL BEDS are designed for use in combination with other ME EQUIPMENT. MANUFACTURERS are encouraged to evaluate not only those characteristics of the MEDICAL BED that could affect the safe operation of the system (the MEDICAL BED in combination with the ME EQUIPMENT) but also the characteristics of the MEDICAL BED, which facilitate the use of the system.

In BB.3 both requirements for MEDICAL BEDS intended for certain APPLICATION ENVIRONMENTS are presented as well as guidelines for MANUFACTURERS when designing MEDICAL BEDS for other APPLICATION ENVIRONMENTS.

Copyright British Standards Institution
Provided by IHS under license with BSI - Uncontrolled Copy
No reproduction or networking permitted without license from IHS
Licensee=Hill Rom Inc/0078415001, User=Laloge, Dennis
Not for Resale, 10/29/2015 08:09:16 MDT

BB.4.2 Combination of MEDICAL BED and MOBILE hoists

The following is presented for consideration when addressing this issue for MEDICAL BEDS in APPLICATION ENVIRONMENTS 1, 2, 3 and 5. For MEDICAL BEDS intended for APPLICATION ENVIRONMENT 4, BB.3.1 is normative.

With the MATTRESS SUPPORT PLATFORM lowered to any position higher than 400 mm, the height of the under MEDICAL BED clearance shall/should be at least 150 mm at a length of at least 500 mm positioned on each side of the symmetry plane of the MATTRESS SUPPORT PLATFORM (see Figure BB.2)

Dimension in millimetres

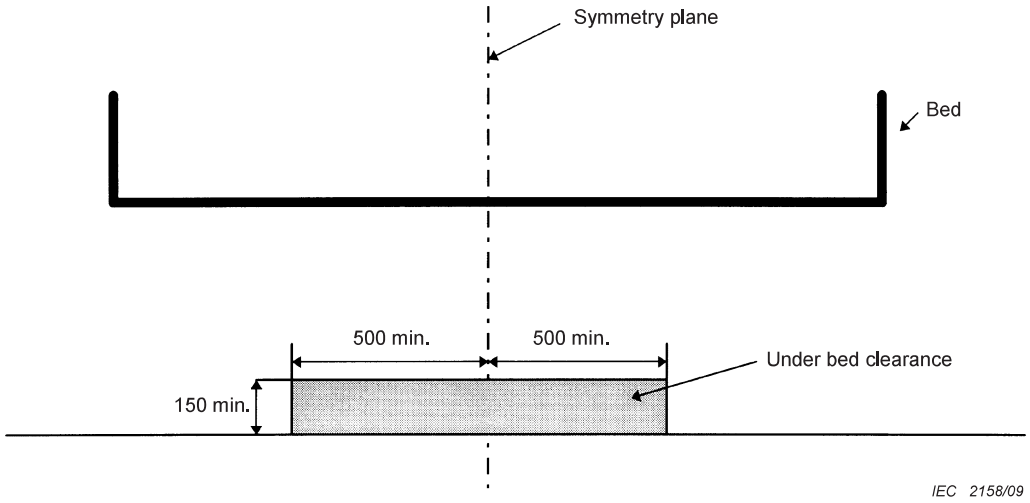

Figure BB.3 – Schematic presentation of under MEDICAL BED clearance

BB.4.3 Combination of MEDICAL BED and mattress

For all MEDICAL BEDS at the area of the MATTRESS SUPPORT PLATFORM intended for the ingress/egress of the BED, the height of the mattress used shall at least be 20 mm higher than any construction part e.g. MEDICAL BED frame, side structure or the lowered SIDE RAILS of the MATTRESS SUPPORT PLATFORM.

When SPECIALITY MATTRESSES are used, a RISK ASSESSMENT shall be performed if the requirement cannot be fulfilled.

BB.4.4 Range of adjustment of moveable sections of the MATTRESS SUPPORT PLATFORM

The required/recommended range of adjustment (if applicable) for back, upper leg, and lower leg sections of the MATTRESS SUPPORT PLATFORM is as follows.

– The angle *A* between the back rest section and the MEDICAL BED board frame (see Figure BB.4) shall/should at least be adjustable within the range of 0° (horizontal) and 70°. A maximum of 85° shall/should only be reachable when the MEDICAL BED is intended to raise a person to an upright sitting position for transfer. Recommendation for MEDICAL BEDS intended for APPLICATION ENVIRONMENTS 1, 2, 3 and 5, requirement for MEDICAL BEDS intended for APPLICATION ENVIRONMENT 4.

– The angle *B* between a line drawn between the turning point of the back rest section/seat section and the turning point of the upper/lower leg section and horizontal (see Figure BB.3) shall/should at least be adjustable between 0° and 12°. Recommendation for

Copyright British Standards Institution
Provided by IHS under license with BSI - Uncontrolled Copy
No reproduction or networking permitted without license from IHS
Licensee=Hill Rom Inc/0078415001, User=Laloge, Dennis
Not for Resale, 10/29/2015 08:09:16 MDT

MEDICAL BEDS intended for APPLICATION ENVIRONMENTS 1, 2, 3 and 5, requirement for MEDICAL BEDS intended for APPLICATION ENVIRONMENT 4.

– The angle *C* between the back rest section and a line draw between the turning point of the back rest section/seat section and the turning point of the upper/lower leg section (see Figure BB.4) shall be greater than 90° for all MEDICAL BEDS (as in 201.15.4.6.2).

– The angle *D* between the lower leg section and horizontal (see Figure BB.4) shall/should at least be adjustable between 0° and 20° under horizontal. Recommendation for MEDICAL BEDS intended for APPLICATION ENVIRONMENTS 1, 2, 3 and 5, requirement for MEDICAL BEDS intended for APPLICATION ENVIRONMENT 4.

– The angle E between the upper side of the upper leg section and the upper side of the lower leg section (see Figure BB.4) shall be at least 180° for all MEDICAL BEDS.

--`,,`,`,`,`,``,`,`,`,`,,`,`,`,`,,,`,,,,-`-`,,`,,`,`,,`---

Copyright British Standards Institution
Provided by IHS under license with BSI - Uncontrolled Copy
No reproduction or networking permitted without license from IHS

Licensee=Hill Rom Inc/0078415001, User=Laloge, Dennis
Not for Resale, 10/29/2015 08:09:16 MDT

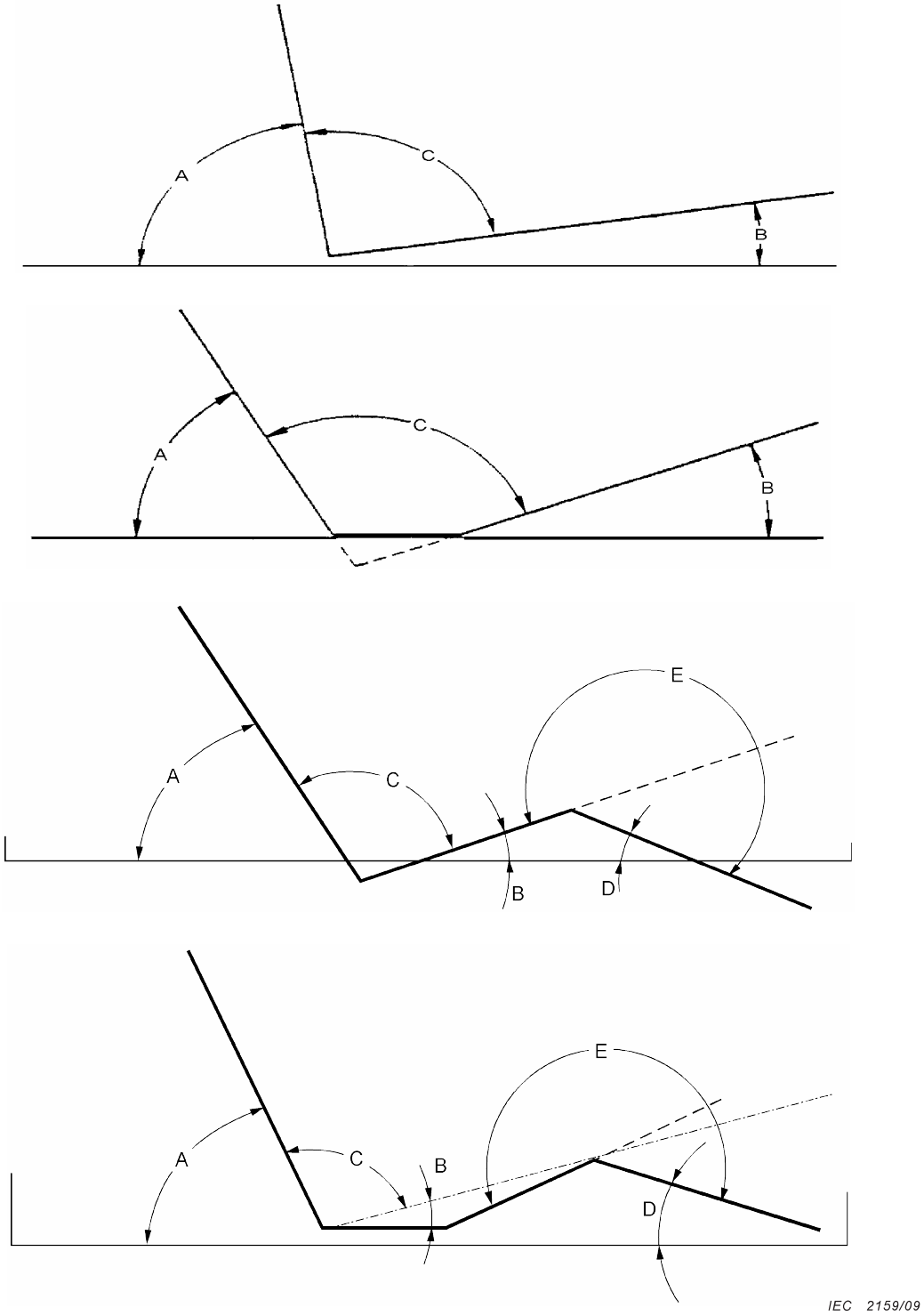

Figure BB.4 – Recommendations and requirements regarding angles for different sections of the MATTRESS SUPPORT PLATFORM

Copyright British Standards Institution
Provided by IHS under license with BSI - Uncontrolled Copy
No reproduction or networking permitted without license from IHS
Licensee=Hill Rom Inc/0078415001, User=Laloge, Dennis
Not for Resale, 10/29/2015 08:09:16 MDT

Annex CC
(informative)

Particular guidance for assessing risk of entrapment in v-shaped openings

An additional proposed test method of assessing RISK of entrapment in v-shaped openings in relation to areas B and C (see Table 201.101) between the elements of SIDE RAIL, HEAD/FOOT BOARDS and MATTRESS SUPPORT PLATFORM is offered. This test method is not validated at the moment and it is placed as an informative annex to receive comments from the IEC-community for future adoptions.

The reasons for offering this additional method are as follows:

For area B it offers an additional method of assessing the contribution to entrapment into the gap between the elements due to the geometry of the v-shaped openings. The test method at the same time reduces the influence of MATTRESS depth and compressibility.

For area C it offers a means of assessing the contribution to entrapment into the gap between the elements due to the geometry of the v-shaped openings, this is not covered in the normative part of the standard (see Table 201.101 area C).

Subclause 201.9.1.101 – Protection against PATIENT entrapment in non-moving parts

To reduce the risk of neck entrapment, openings between elements in the MEDICAL BED system above the MATTRESS SUPPORT PLATFORM should be small enough to prevent passage of a small neck. Additionally to reduce neck entrapment with regards to wedging of the neck, angles for V-shaped entry into the openings should be greater than 75°. The 75° angle reflects an understanding that at some point, a narrow angle creates a V-shaped space or geometry that could be conducive to entrapment. The 75° angle was chosen by reviewing the tools to assess entrapment risk for swimming pool equipment (see EN 13451-1) and making changes suitable to application on MEDICAL BEDS by increasing the wedging minimum angle of 60° to 75°. The 75° angle reduces the RISK of PATIENT entrapment through hooking of the neck and head in the V-shaped opening (See Figure AA.13 and Figure AA.15). The wider angle allows the PATIENT to pull his head free from a vertical opening with less effort. This is essential when considering a weak or confused PATIENT.

To measure V-shaped openings in relation to areas B and C a test method and wedge tool (see Figure CC.1) has been developed. The tool is made from aluminium and weighs 3,34 kg representing the mass of a small adults head and neck (the 3,34 kg was taken from Air Force Research laboratory Design and Development of Anthropometrically Correct Head Forms for Joint Strike Fighter Ejection Seat Testing – February 2005), the wedge angle is 75° and has a 60 mm diameter cylindrical end representing the small adult neck.

Copyright British Standards Institution
Provided by IHS under license with BSI - Uncontrolled Copy
No reproduction or networking permitted without license from IHS
Licensee=Hill Rom Inc/0078415001, User=Laloge, Dennis
Not for Resale, 10/29/2015 08:09:16 MDT

Dimension in millimetres

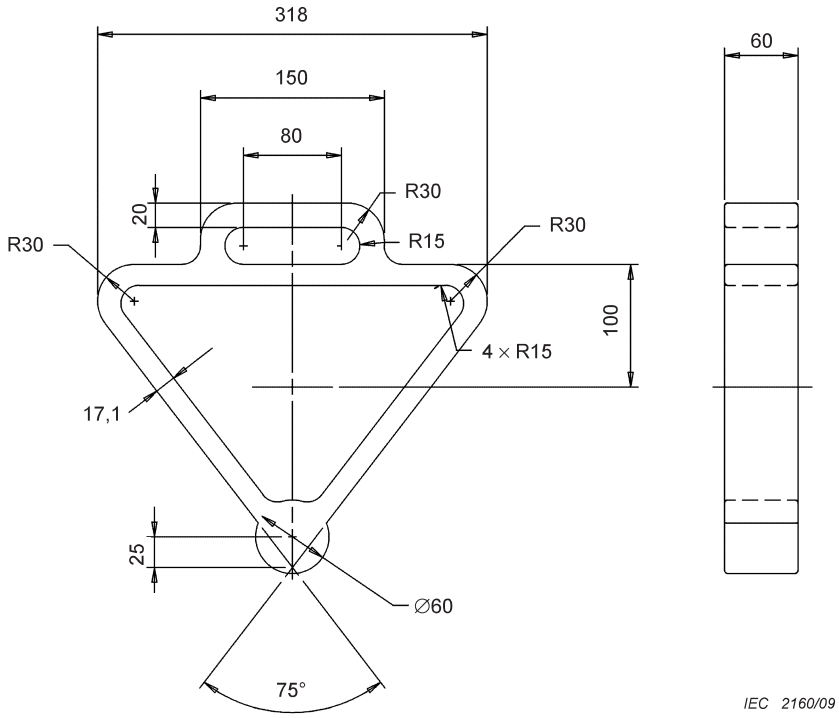

Material: Aluminium

Weight: 3,34 kg

Figure CC.1 – Wedge tool

- Proposed rationale for measurement of area B

The measurement of area B includes the gap beneath the SIDE RAIL, the v-shaped opening between the underneath of the SIDE RAIL and the leading edge of the SIDE RAIL to the MATTRESS SUPPORT PLATFORM (see Figure CC.2). The 75° angle reduces the RISK of PATIENT entrapment through hooking of the neck and head in the v-shaped opening (see Figure AA.13).

- Proposed and unvalidated test method for V- shaped openings

The MATTRESS SUPPORT PLATFORM is set in the flat horizontal position (and at the most disadvantageous height depending on the design) with the SIDE RAILS raised and locked (with segmented SIDE RAILS test independently and together).

Rest the wedge tool against the edge of the MATTRESS SUPPORT PLATFORM and push it into the V-shaped opening between the lowest point of the SIDE RAIL outside of the SIDE RAIL support and the MATTRESS SUPPORT PLATFORM orientating the wedge tool into the narrowest opening. The wedge tool must contact against both sides of the 60 mm cylinder diameter part of the wedge tool (it should not pass through). The opening should not allow the wedge tool to come into contact with both sides of the 75° angle at the same time, see pass fail examples Figure CC.3.

Copyright British Standards Institution
Provided by IHS under license with BSI - Uncontrolled Copy
No reproduction or networking permitted without license from IHS
Licensee=Hill Rom Inc/0078415001, User=Laloge, Dennis
Not for Resale, 10/29/2015 08:09:16 MDT

The influence of any specified mattress fitted on the areas of potential entrapment should be assessed for acceptability and justified in the MANUFACTURERS RISK MANAGEMENT FILE.

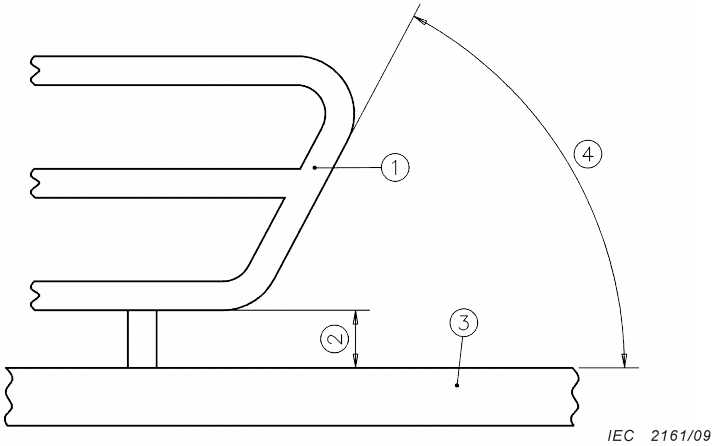

Key

1 Leading edge of safety side

2 Gap (< 60 mm)

3 Mattress support platform

4 V-shaped opening (> 75°)

Figure CC.2 – V-shaped opening in relation to B

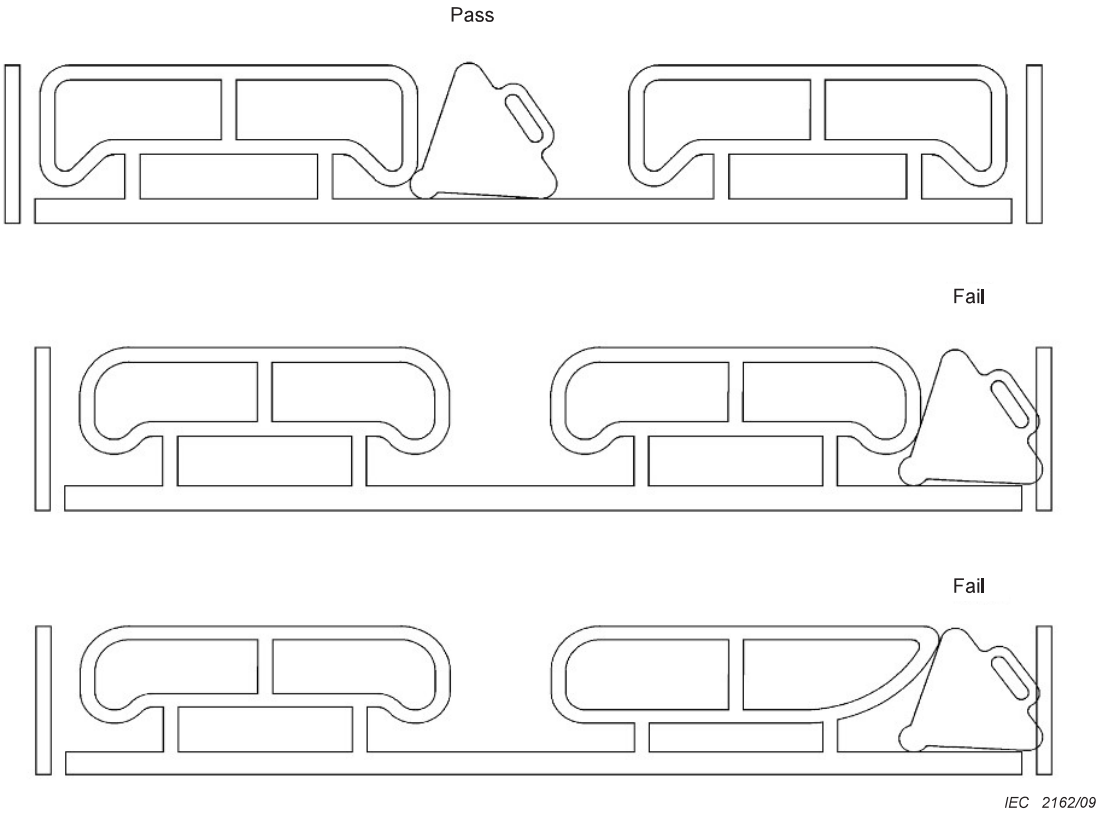

Figure CC.3 – Pass/fail in relation to area B

Copyright British Standards Institution
Provided by IHS under license with BSI - Uncontrolled Copy
No reproduction or networking permitted without license from IHS
Licensee=Hill Rom Inc/0078415001, User=Laloge, Dennis
Not for Resale, 10/29/2015 08:09:16 MDT

- Proposed rationale for measurement of area C with the wedge tool

The measurement of area C includes the v-shaped openings between the SIDE RAIL and the HEAD/FOOTEND and the v-shaped opening between split SIDE RAILS. The 75° angle reduces the risk of PATIENT entrapment through hooking of the neck and head in the v-shaped opening (see Figures AA.14 and AA.15).

- Proposed and unvalidated test method area C for V- shaped openings

The mattress support platform is set in the flat horizontal position (and at the most disadvantageous height depending on the design) with the SIDE RAILS in any raised and locked positions. For beds with segmented SIDE RAILS the test has also to be performed in the worst case opening between SIDE RAILS in articulated positions.

Hold the wedge tool by the handle and place it between the narrowest distance between the gap in the V-shaped opening. Allow the tool to rest under its own weight in the opening, the 60 mm diameter cylindrical end should always contact both sides of the V-shaped opening and should not pass through into the gap. Rotate the tool until one of the 75° angled sides touches the edge of one side of the opening (it may be necessary to angle the tool to locate it against the narrowest part of the opening, see Figure CC.4).

The opening should not allow the wedge tool to come into contact with both sides of the 75° angle at the same time, see pass/fail examples Figures CC.5 and CC.6.

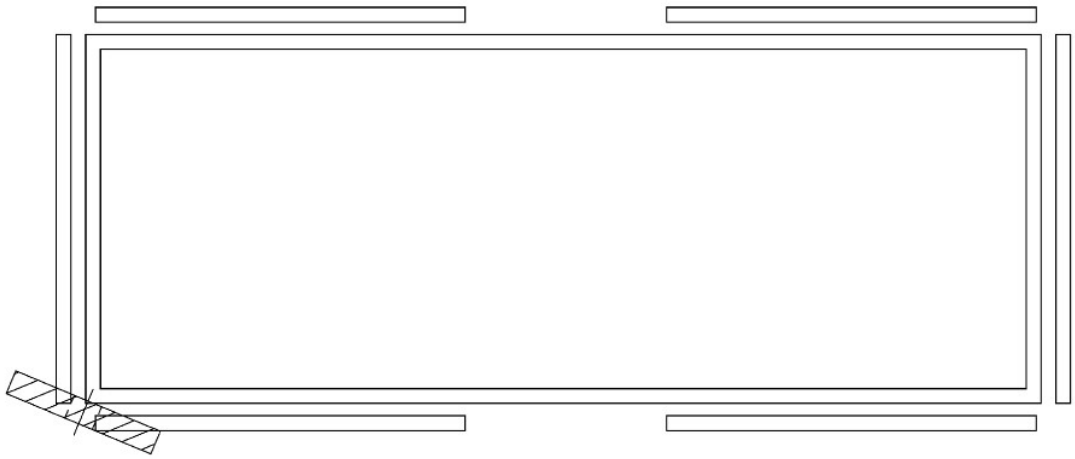

Figure CC.4 – Positioning of wedge tool

Copyright British Standards Institution
Provided by IHS under license with BSI - Uncontrolled Copy
No reproduction or networking permitted without license from IHS
Licensee=Hill Rom Inc/0078415001, User=Laloge, Dennis
Not for Resale, 10/29/2015 08:09:16 MDT

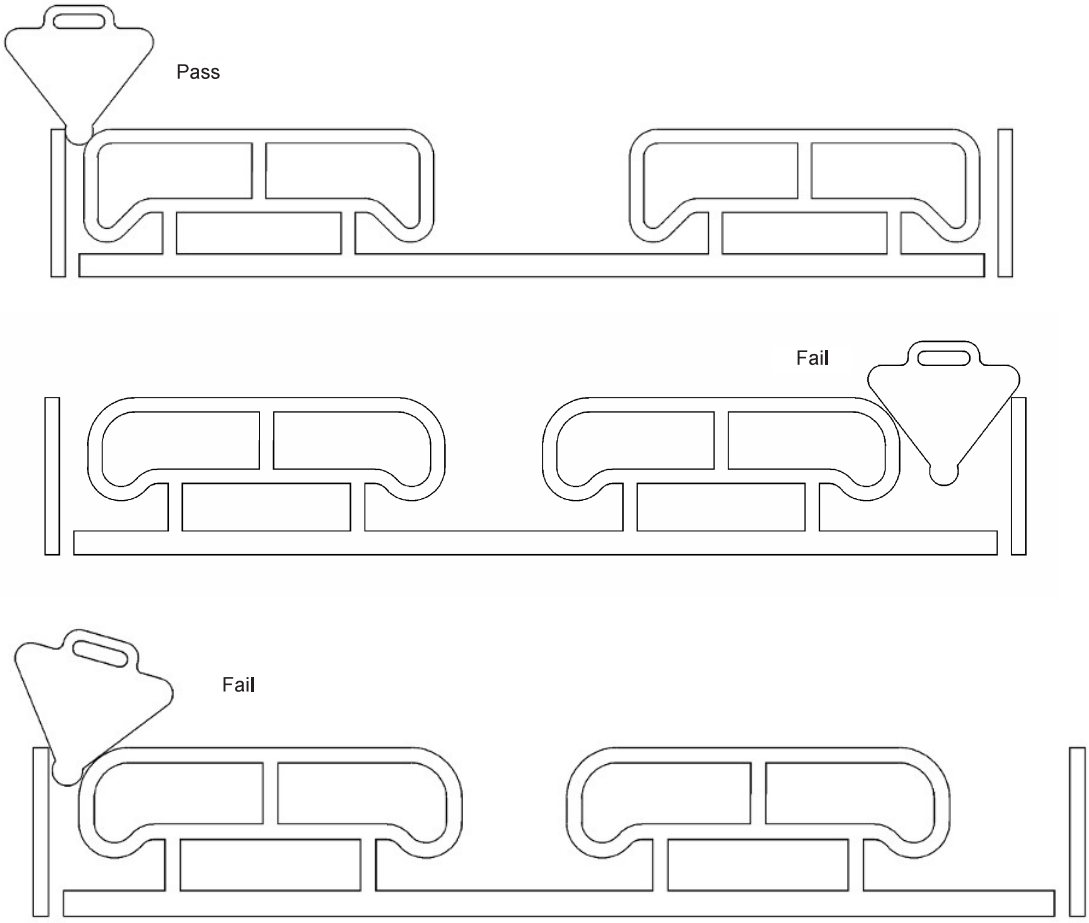

IEC 2164/09

Figure CC.5 – Pass/fail in relation to area C between HEAD BOARD and FOOT BOARD

Copyright British Standards Institution
Provided by IHS under license with BSI - Uncontrolled Copy
No reproduction or networking permitted without license from IHS
Licensee=Hill Rom Inc/0078415001, User=Laloge, Dennis
Not for Resale, 10/29/2015 08:09:16 MDT

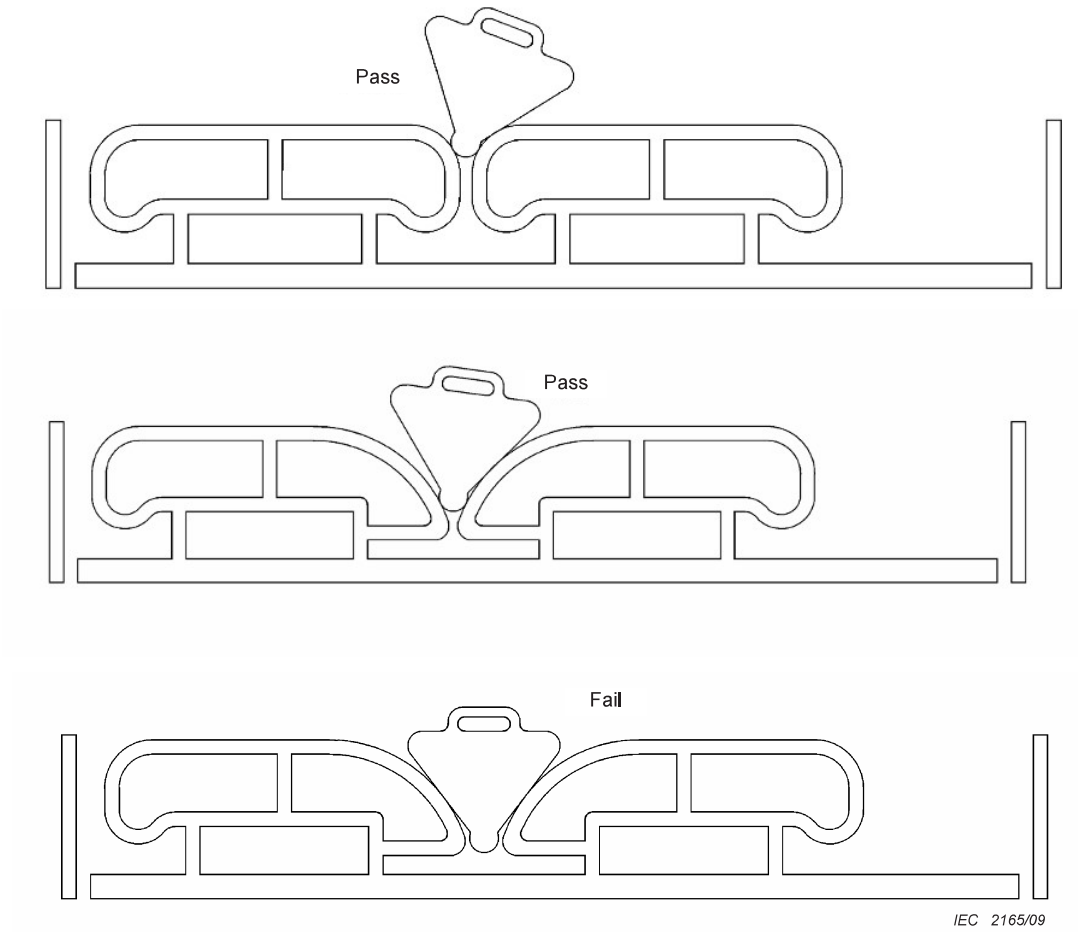

Figure CC.6 – Pass/fail in relation to area C between split SIDE RAILS

Copyright British Standards Institution
Provided by IHS under license with BSI - Uncontrolled Copy
No reproduction or networking permitted without license from IHS
Licensee=Hill Rom Inc/0078415001, User=Laloge, Dennis
Not for Resale, 10/29/2015 08:09:16 MDT

Bibliography

[1] HD22.10 H05-BQ-F (DIN VDE 0207-20, *Insulating and sheating compounds for cables and flexible cords – Rubber insulating compounds)*

[2] People Size, 1998

[3] IEC 60601-2-38, *Medical electrical equipment – Part 2: Particular requirements for the safety of electrically operated hospital beds*

[4] EN 1970, *Adjustable beds for disabled persons – Requirements and test methods*

[5] EN 13451-1, *Swimming pool equipment – General safety requirements and test methods*

[6] PEEBLES, Laura and NORRIS Beverley. *Adultdata: The handbook of Adult Anthropometric and Strength Measurements*. University of Nottingham, 1998

[7] AFRL-HE-WP-TR-2005-0044, *Design and Development of Anthropometrically Correct Head Forms for Joint Strike Fighter Ejection Seat Testing*, Air Force Research Laboratory

Copyright British Standards Institution
Provided by IHS under license with BSI - Uncontrolled Copy
No reproduction or networking permitted without license from IHS

Licensee=Hill Rom Inc/0078415001, User=Laloge, Dennis
Not for Resale, 10/29/2015 08:09:16 MDT

Index of defined terms used in this particular standard

ACCESSORY ..... IEC 60601-1:2005, 3.3
APPLICATION ENVIRONMENT 1 ..... 201.3.201
APPLICATION ENVIRONMENT 2 ..... 201.3.202
APPLICATION ENVIRONMENT 3 ..... 201.3.203
APPLICATION ENVIRONMENT 4 ..... 201.3.204
APPLICATION ENVIRONMENT 5 ..... 201.3.205
APPLIED PART 201.3.8
BASIC SAFETY ..... IEC 60601-1:2005, 3.10
BED-LIFT 201.3.206
CLASS II ..... IEC 60601-1:2005, 3.14
COMPONENTS WITH HIGH-INTEGRITY CHARACTERISTICS ..... IEC 60601-1:2005, 3-17
DISABLED PERSON 201.3.207
ENCLOSURE ..... IEC 60601-1:2005, 3.26
ESSENTIAL PERFORMANCE ..... IEC 60601-1:2005, 3.27
EXPECTED SERVICE LIFE ..... IEC 60601-1:2005, 3.28
FUNCTIONAL CONNECTION ..... IEC 60601-1:2005, 3.33
HAZARD ..... IEC 60601-1:2005, 3.39
HAZARDOUS SITUATION ..... IEC 60601-1:2005, 3.40
HEAD/FOOT BOARD 201.3.208
INTENDED USE ..... IEC 60601-1:2005, 3.44
LEAKAGE CURRENT ..... IEC 60601-1:2005, 3.47
LIFTING POLE 201.3.209
MAINS VOLTAGE ..... IEC 60601-1:2005, 3.54
MANUFACTURER ..... IEC 60601-1:2005, 3.55
MATTRESS OVERLAY 201.3.210
MATTRESS SUPPORT PLATFORM 201.3.211
MECHANICAL HAZARD ..... IEC 60601-1:2005, 3.61
MECHANICAL PROTECTIVE DEVICE ..... IEC 60601-1:2005, 3.62
MEDICAL BED 201.3.212
MEDICAL ELECTRICAL EQUIPMENT (ME EQUIPMENT) ..... IEC 60601-1:2005, 3.63
MEDICAL ELECTRICAL SYSTEM (ME SYSTEM) ..... IEC 60601-1:2005, 3.64
MOBILE ..... IEC 60601-1:2005, 3.65
MODEL OR TYPE REFERENCE ..... IEC 60601-1:2005, 3.66
MOTION LOCKOUT CONTROL 201.3.213
NORMAL USE ..... IEC 60601-1:2005, 3.71
OPERATOR ..... IEC 60601-1:2005, 3.73
PATIENT 201.3.76
PENDANT CONTROL 201.3.214
POWER SUPPLY CORD ..... IEC 60601-1:2005, 3.87
PROCESS ..... IEC 60601-1:2005, 3.89
PROGRAMMABLE ELECTRICAL MEDICAL SYSTEMS (PEMS) ..... IEC 60601-1:2005, 3.90
RESPONSIBLE ORGANIZATION ..... IEC 60601-1:2005, 3.101

Copyright British Standards Institution
Provided by IHS under license with BSI - Uncontrolled Copy
No reproduction or networking permitted without license from IHS
Licensee=Hill Rom Inc/0078415001, User=Laloge, Dennis
Not for Resale, 10/29/2015 08:09:16 MDT

RISK ..... IEC 60601-1:2005, 3.102
RISK ANALYSIS ..... IEC 60601-1:2005, 3.103
RISK ASSESSMENT ..... IEC 60601-1:2005, 3.104
RISK MANAGEMENT FILE ..... IEC 60601-1:2005, 3.108
SAFE WORKING LOAD ..... IEC 60601-1:2005, 3.109
SIDE RAIL 201.3.215
SINGLE FAULT CONDITION ..... IEC 60601-1:2005, 3.116
SPECIALTY MATTRESS 201.3.216
SUPPLY MAINS ..... IEC 60601-1:2005, 3.120
TENSILE SAFETY FACTOR ..... IEC 60601-1:2005, 3.121
TEST BED BOARD 201.3.217
TOOL ..... IEC 60601-1:2005, 3.127
TRAPPING ZONE 201.3.131
UNDERCARRIAGE 201.3.218
USABILITY ..... IEC 60601-1:2005, 3.136

Copyright British Standards Institution
Provided by IHS under license with BSI - Uncontrolled Copy
No reproduction or networking permitted without license from IHS

Licensee=Hill Rom Inc/0078415001, User=Laloge, Dennis
Not for Resale, 10/29/2015 08:09:16 MDT

This page deliberately left blank

Copyright British Standards Institution
Provided by IHS under license with BSI - Uncontrolled Copy
No reproduction or networking permitted without license from IHS

Licensee=Hill Rom Inc/0078415001, User=Laloge, Dennis
Not for Resale, 10/29/2015 08:09:16 MDT

NO COPYING WITHOUT BSI PERMISSION EXCEPT AS PERMITTED BY COPYRIGHT LAW

British Standards Institution (BSI)

BSI is the national body responsible for preparing British Standards and other standards-related publications, information and services.

BSI is incorporated by Royal Charter. British Standards and other standardization products are published by BSI Standards Limited.

About us

We bring together business, industry, government, consumers, innovators and others to shape their combined experience and expertise into standards -based solutions.

The knowledge embodied in our standards has been carefully assembled in a dependable format and refined through our open consultation process. Organizations of all sizes and across all sectors choose standards to help them achieve their goals.

Information on standards

We can provide you with the knowledge that your organization needs to succeed. Find out more about British Standards by visiting our website at bsigroup.com/standards or contacting our Customer Services team or Knowledge Centre.

Buying standards

You can buy and download PDF versions of BSI publications, including British and adopted European and international standards, through our website at bsigroup.com/shop, where hard copies can also be purchased.

If you need international and foreign standards from other Standards Development Organizations, hard copies can be ordered from our Customer Services team.

Subscriptions

Our range of subscription services are designed to make using standards easier for you. For further information on our subscription products go to bsigroup.com/subscriptions.

With **British Standards Online (BSOL)** you'll have instant access to over 55,000 British and adopted European and international standards from your desktop. It's available 24/7 and is refreshed daily so you'll always be up to date.

You can keep in touch with standards developments and receive substantial discounts on the purchase price of standards, both in single copy and subscription format, by becoming a **BSI Subscribing Member**.

PLUS is an updating service exclusive to BSI Subscribing Members. You will automatically receive the latest hard copy of your standards when they're revised or replaced.

To find out more about becoming a BSI Subscribing Member and the benefits of membership, please visit bsigroup.com/shop.

With a **Multi-User Network Licence (MUNL)** you are able to host standards publications on your intranet. Licences can cover as few or as many users as you wish. With updates supplied as soon as they're available, you can be sure your documentation is current. For further information, email bsmusales@bsigroup.com.

Revisions

Our British Standards and other publications are updated by amendment or revision.

We continually improve the quality of our products and services to benefit your business. If you find an inaccuracy or ambiguity within a British Standard or other BSI publication please inform the Knowledge Centre.

Copyright

All the data, software and documentation set out in all British Standards and other BSI publications are the property of and copyrighted by BSI, or some person or entity that owns copyright in the information used (such as the international standardization bodies) and has formally licensed such information to BSI for commercial publication and use. Except as permitted under the Copyright, Designs and Patents Act 1988 no extract may be reproduced, stored in a retrieval system or transmitted in any form or by any means – electronic, photocopying, recording or otherwise – without prior written permission from BSI. Details and advice can be obtained from the Copyright & Licensing Department.

Useful Contacts:

Customer Services
Tel: +44 845 086 9001
Email (orders): orders@bsigroup.com
Email (enquiries): cservices@bsigroup.com

Subscriptions
Tel: +44 845 086 9001
Email: subscriptions@bsigroup.com

Knowledge Centre
Tel: +44 20 8996 7004
Email: knowledgecentre@bsigroup.com

Copyright & Licensing
Tel: +44 20 8996 7070
Email: copyright@bsigroup.com

BSI Group Headquarters

389 Chiswick High Road London W4 4AL UK

...making excellence a habit.™

Copyright British Standards Institution
Provided by IHS under license with BSI - Uncontrolled Copy
No reproduction or networking permitted without license from IHS

Licensee=Hill Rom Inc/0078415001, User=Laloge, Dennis
Not for Resale, 10/29/2015 08:09:16 MDT